Zebra® QLn™ Series Mobile Printers

User Guide

P1028026-002 Rev. A
April, 2011

Table of Contents

Proprietary Statements 4
Document Conventions 6
Introduction to the QLn™ Series Printers 7
Unpacking and Inspection 7
Reporting Damage 7
QLn Series Technology 8
Smart Battery....8
Printing Technology 9
Direct Thermal....9
QLn Series Overview 10
Getting Ready to Print 12
Battery.... 12
Installing the Battery 12
Battery Safety 13
Charger Safety....13
Smart Charger-2 (SC2) Single Battery Charger.... 14
Model UCLI72-4 Quad Charger....16
Ethernet and Charging Cradles 19
Printer Operation with Cradle 21
AC Power Adapter (included in kit p/n P1031365-024)....23
Loading the Media in the QLn Series Printers 24
Loading Media in Peel-off Mode....26
Operator Controls 27
Standard Control Panel 27
LCD Control Panel 29
Status Bar Icons 30
31
Main Menu Screen 32
Programmable LCD Settings 33
Verify the Printer Is Working 34
Printing a Configuration Label 34
Connecting the Printer 34
Cable Communication....35
RS-232C Communications....35
USB Communications 35
Providing Strain Relief for Communications Cable 36
Wireless Communications with Bluetooth™ 38
Bluetooth Networking Overview 38
WLAN Overview....39
Setting Up the Software 39
Using the Accessories....40
Swivel Belt Clip....40
Soft Case....40
Adjustable Shoulder Strap....41
Hand Strap....42
Preventive Maintenance 43
Extending Battery Life 43
General Cleaning Instructions 43
QLn Series Cleaning....44
Troubleshooting 46

Front Control Panel 46
LCD Control Panel Indicators 47
Troubleshooting Tests 50
Printing a Configuration Label 50
Communications Diagnostics 50
Contacting Technical Support 51
Specifications 55
Printing Specifications 55
Memory and Communications Specifications for QLn Series 55
Label Specifications 56
CPCL Font and Bar Code Specifications and Commands 57
ZPL Font and Bar Code Specifications and Commands 58
Communications Ports 59
Physical, Environmental and Electrical Specifications 60
QLn Series Accessories 63
Appendix A 64
Interface Cables 64
RS232 Cables 64
USB Cable 65
More Interface Cables 65
Appendix B 66
Media Supplies 66
Appendix C 66
Maintenance Supplies 66
Appendix D 67
Product Support 67
Appendix E 69
Battery Disposal 69
Product Disposal 69
Appendix F 70
Using zebra.com 70
Appendix G 72
Alert Messages 72
Index 73
Patent Numbers 74

Proprietary Statements

This manual contains proprietary information of Zebra Technologies Corporation. It is intended solely for the information and use of parties operating and maintaining the equipment described herein. Such proprietary information may not be used, reproduced, or disclosed to any other parties for any other purpose without the expressed written permission of Zebra Technologies Corporation.

Product Improvements

Since continuous product improvement is a policy of Zebra Technologies Corporation, all specifications and signs are subject to change without notice.

Agency Approvals and Regulatory Information

- Design certified by TUV
- Canadian STD RSS-210
- EN60950: 2006 Safety Standard
- C-Tick (Australia)
- FCC part 15 Class B
- EN55024:2003 European Immunity Standard
- NOM/ETL (Mexico)
- EN55022:2006 Class B European Electromagnetic Radiation Standard

Liability Disclaimer

Inasmuch as every effort has been made to supply accurate information in this manual, Zebra Technologies Corporation is not liable for any erroneous information or omissions. Zebra Technologies Corporation reserves the right to correct any such errors and disclaims liability resulting therefrom.

No Liability for Consequential Damage

In no event shall Zebra Technologies Corporation or anyone else involved in the creation, production, or delivery of the accompanying product (including hardware and software) be liable for any damages whatsoever (including, without limitation, damages for loss of business profits, business interruption, loss of business information, or other pecuniary loss) arising out of the use of or the results of use of or inability to use such product, even if Zebra Technologies Corporation has been advised of the possibility of such damages. Because some states do not allow the exclusion of liability for consequential or incidental damages, the above limitation may not apply to you.

Copyrights

The copyrights in this manual and the label print engine described therein are owned by Zebra Technologies Corporation. Unauthorized reproduction of this manual or the software in the label print engine may result in imprisonment of up to one year and fines of up to $10,000 (17 U.S.C.506). Copyright violators may be subject to civil liability.

This product may contain ZPL®, ZPL II®, and ZebraLink™ programs; Element Energy Equalizer® Circuit; E3®; and AGFA fonts. Software © ZIH Corp. All rights reserved worldwide. ZebraLink and all product names and numbers are trademarks, and Zebra, the Zebra logo, ZPL, ZPL II, Element Energy Equalizer Circuit, and E3 Circuit are registered trademarks of ZIH Corp. All rights reserved worldwide.

Monotype®, Intellifont® and UFST® are trademarks of Monotype Imaging, Inc. registered in the United States Patent and Trademark Office and may be registered in certain jurisdictions.

Andy™ , CG Palacio™, CG Century Schoolbook™, CG Triumvirate™, CG Times™, Monotype Kai™, Monotype Mincho™ and Monotype Sung™ are trademarks of Monotype Imaging, Inc. and may be registered in some jurisdictions.

HY Gothic Hangul™ is a trademark of Hanyang Systems, Inc.

Angsana™ is a trademark of Unity Progress Company (UPC) Limited.

Andale®, Arial®, Book Antiqua®, Corsiva®, Gill Sans®, Sorts® and Times New Roman® are trademarks of The Monotype Corporation registered in the United States Patent and Trademark Office and may be registered in certain jurisdictions.

Century Gothic™, Bookman Old Style™ and Century Schoolbook™ are trademarks of The Monotype Corporation and may be registered in certain jurisdictions.

HGPGothicB is a trademark of the Ricoh company, Ltd. and may be registered in some jurisdictions.

Univers™ is a trademark of Heidelberger Druckmaschinen AG, which may be registered in certain jurisdictions, exclusively licensed through Linotype Library GmbH, a wholly owned

subsidiary of Heidelberger Druckmaschinen AG.
Futura® is a trademark of Bauer Types SA registered in the United States Patent and Trademark Office and may be registered in some jurisdictions.
TrueType® is a trademark of Apple Computer, Inc. registered in the United States Patent and Trademark Office and may be registered in certain jurisdictions.
All other product names are the property of their respective owners.

© 1996–2009, QNX Software Systems GmbH & Co. KG. All rights reserved. Published under license by QNX Software Systems Co.

All other brand names, product names, or trademarks belong to their respective holders.
©2011 ZIH Corp.

Document Conventions

The following conventions are used throughout this document to convey certain information:

Cautions, Important, and Note

Caution • Warns you of the potential for electrostatic discharge.

Caution • Warns you of a potential electric shock situation.

Caution • Warns you of a situation where excessive heat could cause a burn

Caution • Advises you that failure to take or avoid a specific action could result in physical harm to you.

Caution • Advises you that failure to take or avoid a specific action could result in physical harm to the hardware.

Important • Advises you of information that is essential to complete a task.

Note • Indicates neutral or positive information that emphasizes or supplements important points of the main text.

Introduction to the QLn™ Series Printers

Thank you for choosing our Zebra® QLn™ Series Mobile Printers. You will find these rugged printers will become a productive and efficient addition to your workplace thanks to their innovative design. Zebra Technologies is the leader in industrial printers with world-class support for all of your bar code printers, software, and supplies.

This user's guide gives you the information you will need to operate the QLn320 and QLn220 printers. These printers use CPCL and ZPL programming languages. To create and print labels using the CPCL and ZPL languages, refer to the Mobile Printing Systems CPCL Programming Manual and ZPL Programming Guide (available at www.zebra.com/manuals)

QLn Series Software Utilities:

- Zebra Net Bridge™ : printer configuration, fleet management
- Zebra Setup Utility: single printer configuration, quick setup
- Zebra Designer Pro: label design
- Zebra Designer Drivers: Windows® driver
- OPOS Driver: Windows driver
- Multiplatform SDK

(These utilities can be found at www.zebra.com and on the product CD that comes with the printer.)

Unpacking and Inspection

Inspect the printer for possible shipping damage:

- Check all exterior surfaces for damage.
- Open the media cover (refer to "Loading the Media" in the Getting Ready to Print section) and inspect the media compartment for damage.

In case shipping is required, save the carton and all packing material.

Reporting Damage

If you discover shipping damage:

- Immediately notify and file a damage report with the shipping company. Zebra Technologies Corporation is not responsible for any damage incurred during shipment of the printer and will not cover the repair of this damage under its warranty policy.
- Keep the carton and all packing material for inspection.
- Notify your authorized Zebra re-seller.

QLn Series Technology

The QLn320 and QLn220 use several technologies made popular in other Zebra Mobile Printer product lines.

Smart Battery

The QLn Series battery pack is a high capacity, smart Lithium Ion battery that contains electronics which allow the printer to monitor its operating parameters. Among these are the number of charge cycles it has undergone and its date of manufacture. Using these parameters, the printer's software can monitor the battery's condition and alert the user when to recharge or remove the battery from service.

Operating Temperature	Charging Temperature	Storage Temperature
-20^{0}C to +50^{0}C	0^{0}C to +40^{0}C	-25^{0}C to +65^{0}C

The QLn Series printers will only function properly with genuine Zebra smart battery packs.

The smart battery's health has three states: GOOD, REPLACE, and POOR. The battery health factor determines whether or not the printer can operate and what is communicated to the user via the display.

# of Charge Cycles	Health	Power-up Message
<300	GOOD	None
<550 but >300	REPLACE	"Battery Diminished Consider Replacing" *
>550 but <600	REPLACE	"Warning-Battery is Past its Useful Life" **
>600	POOR	"Replace Battery Shutting Down" ***

* Warning accompanied by three beeps in rapid succession.

** Warning accompanied by a series of three double beeps in rapid succession.

*** Warning will flash on and off and be accompanied by beeping at a rate of once per second. After 30 seconds the printer will shut down.

Printing Technology

The QLn320 and QLn220 use the Direct Thermal method to print human readible text, graphics and barcodes. It incorporates a sophisticated print engine for optimal printing under all operational conditions.

Direct Thermal

Direct thermal printing uses heat to cause a chemical reaction on specially treated media. This reaction creates a dark mark wherever a heated element on the printhead comes in contact with the media. Since the printing elements are arranged very densely at 203 d.p.i. (dots per inch) horizontal and 200 d.p.i. vertical, highly legible characters and graphic elements may be created a row at a time as the media is advanced past the printhead. This technology has the advantage of simplicity, as there is no requirement for consumable supplies such as ink or toner. However, since the media is sensitive to heat, it will gradually loose legibility over long periods of time, especially if exposed to environments with relatively high temperatures.

QLn Series Overview

Figure 1: QLn320 Shown

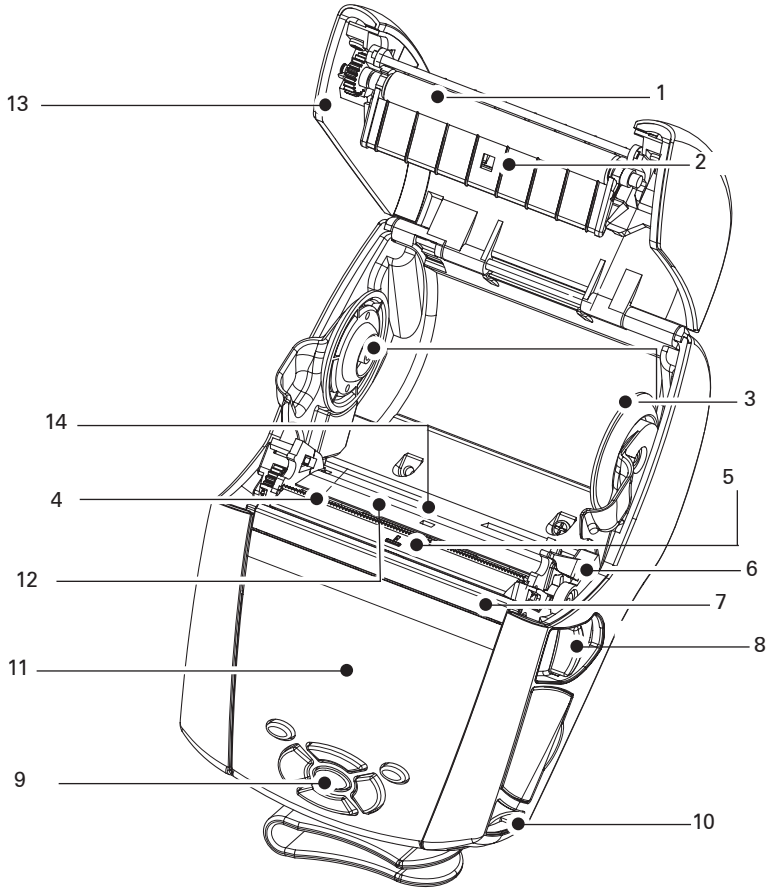

1 Platen Roller
2. Bar Sensor
3. Media Support Disks
4. Tear Bar
5. Label Presence Sensor
6. Peeler Lever
7. Peeler Bail
8. Latch Release Lever
9. Key Pad
10. Strap Post
11. Status Screen
12. Printhead
13. Media Cover
14. Gap Sensor

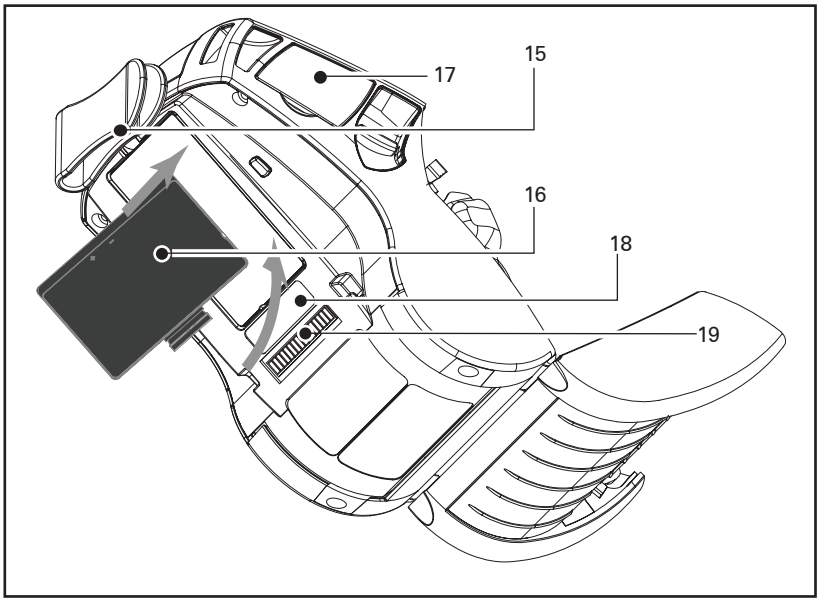

15. Belt Clip
16. Battery
17. USB/ RS-232 Comm Ports
18. MAC Address Label
19. Docking Contacts
20. DC Input

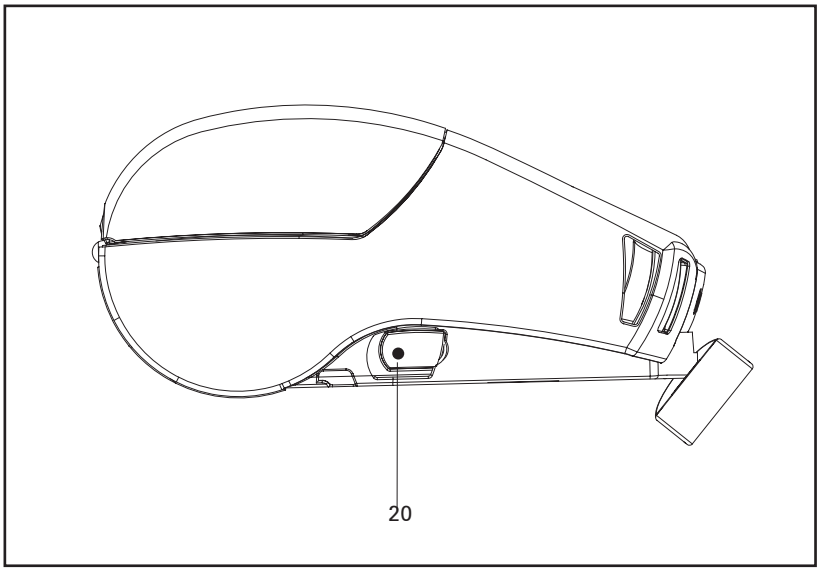

Battery

Installing the Battery

Important • Batteries are shipped partially charged. Remove protective shrink-wrap and labels from new battery packs prior to use.

1. Locate the battery compartment on the bottom of the printer.
2. Insert the battery into the printer as shown in Figure 2. (It is not possible to insert the pack in an incorrect orientation.)
3. Rock the battery into the compartment as shown until it locks in place.

When the battery is first installed, the control panel indicators may briefly turn on and then go off which indicates the battery is not fully charged (see “Charging the Battery” below and “Operator Controls”).

You must charge the batteries fully before using them for the first time. To ensure maximum battery capacity, new batteries should go through two or three complete charge/discharge cycles when first put into service.

Figure 2: Installing the Battery

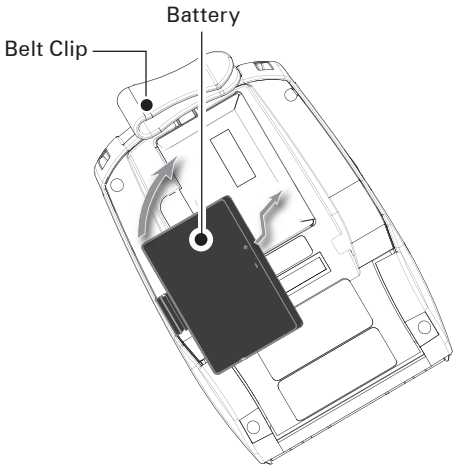

Battery Safety

Caution • Avoid accidental short circuiting of any battery. Allowing battery terminals to contact conductive material will create a short circuit which could cause burns and other injuries or could start a fire.

Important • Always refer to the Important Safety Information data sheet shipped with each printer and the Technical Bulletin shipped with each battery pack. These documents detail procedures to ensure maximum reliability and safety while using this printer.

Important • Always dispose of used batteries properly. Refer to Appendix E for more battery recycling information.

Caution • Use of any charger not approved specifically by Zebra for use with its batteries could cause damage to the battery pack or the printer and will void the warranty.

Caution • Do not incinerate, disassemble, short circuit, or expose to temperatures higher than 60°C (140°F).

Charger Safety

Do not place any charger in locations where liquids or metallic objects may be dropped into the charging bays.

Smart Charger-2 (SC2) Single Battery Charger

The Smart Charger-2 (SC2) is a charging system for use with the 2-cell lithium-ion smart batteries used in the QLn Series printers. The goal of the SC2 is to fully charge a QLn battery in an average time of three (3) hours.

Charging Status Indicators

The SC2 uses a LED indicator to indicate the charge state in either Green, Yellow, or Amber as detailed below.

DC Power Input	Indicator	Battery Status
Present	Green	Battery not present
Present	Green	Fully charged
Present	Yellow	Charging
Present	Amber	Fault
Present	Off	Present and Battery Health = POOR

There will also be a battery charging graphic to indicate that this LED is the charging status indicator .

Battery Health Indicator

The SC2 features a tri-color (Yellow/Green/Amber) LED to indicate the health of the battery pack. An evaluation of the battery health begins upon insertion of the battery in the charger and results in the appropriate LED being illuminated as shown below. The LED will remain illuminated as long as input power is applied.

Battery	Indicator	Health Status
None or non-smart	Off	
Smart battery present	Green	GOOD
Smart battery present	Yellow	CAPACITY DIMINISHED
Smart battery present	Flashing yellow	PAST USEFUL LIFE
Smart battery present	Amber	UNUSABLE-REPLACE (discard per Instructions in Appendix E

Figure 3: Single Charger (SC2)

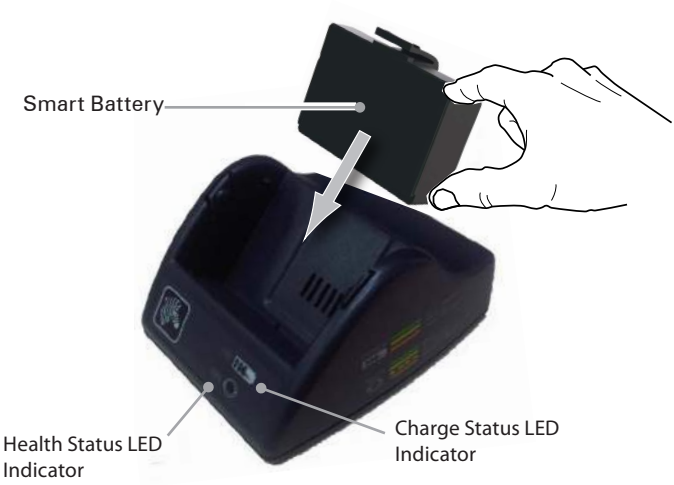

Figure 4: SC2 Dimensions

Height	Width	Length
65,1 mm (2.56 in.)	101,5 mm (4 in.)	120,9 mm (4.75 in.)

Model UCLI72-4 Quad Charger

The UCLI72-4 Quad Charger is designed to charge up to four QLn battery packs simultaneously. Batteries must be removed from the printer to be charged in the Quad Charger.

1. Ensure that the charger has been installed properly per the Quad Charger instruction manual. Ensure that the power indicator on the front panel is on.
2. Remove any protective shrink-wrap and labels from all battery packs prior to use. Plug a battery pack into any one of the four charging bays as shown in Figure 5, noting the orientation of the battery pack. Slide the battery pack into the charging bay until it stops and then rock the battery pack back until it snaps into place. The amber indicator directly under the battery being charged will turn on if the battery is properly inserted.

The indicators under the battery will allow you to monitor the charging process per the table below:

Amber	Green	Battery Status
On	Off	Charging
On	Flashing	80% charged (O.K. to use)
Off	On	Completely Charged
Flashing	Off	Fault

Important • A fault condition is caused by a problem with the battery. The charger may indicate a fault because the battery is too hot or cold to charge reliably. Try to charge the battery again when it returns to the room's ambient temperature. If the amber indicator starts flashing on the second attempt, the battery should be discarded. Always dispose of batteries in a proper manner as described in Appendix E.

Quad Charger Cycle Times :

Battery Status	QLn320
Battery 80% Charged	1.5 Hrs.
Battery Fully Charged	3 Hrs.

Note • These times are for completely discharged batteries.

Battery packs which are only partially discharged will take less time to reach their charged state. Batteries which have reached 80% of their charge capacity may be used, however, it is recommended that you allow the batteries to reach a full charge to maintain maximum battery life.

The UCLI72-4 Quad Charger has a safety feature which stops charging a battery after six hours regardless of its charge state. If not fully charged, it might be indicative of a battery that needs to be replaced.

Use care when installing the UCLI72-4 Quad Charger so that you do not block the ventilating slots on the top and bottom covers. Ensure that the charger is plugged into a power source which will not accidently be turned off if you will be charging batteries overnight.

Figure 5: Quad Charger

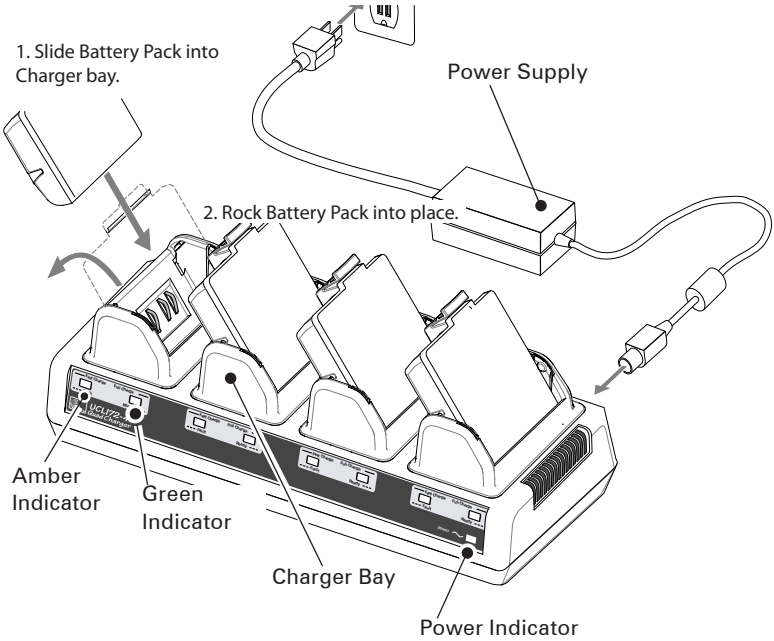

continued

Ethernet and Charging Cradles

The cradle is an expansion base intended for use with the QLn320 printer, as well as the QLn220 printer. There is a four bay cradle (QLn-EC4) or a single bay option (QLn-EC) as shown on pages 19 and 20.

It provides charging power to the docked printer as well as providing a standard 10/100Mb/S Ethernet port for communication to the printer. The EC also supplies battery charging power to the docked printer and acts as a supplementary power source for a functioning QLn printer.

The EC features two green LED's to indicate the status of the cradle: Solid green to indicate when power ⏻ is provided to the input of the EC; and blinking green to indicate Ethernet activity .

The cradle allows the user to dock the printer easily and remove it with the push of a button. The printer shall remain operable while docked, i.e. display is viewable, charge LED status is viewable, and printer controls and data entry are available. The printer will still print while docked and the user shall be able to replace the media as well.

Note • Remove the "Docking Cradle Access" label on the bottom of the printer before docking the printer in the cradle.

Note • Clean the docking contacts with the cleaning pen provided with the printer to remove any residue from the label.

LED Status	Indication
Solid Green	Power On
Blinking Green	Ethernet Activity

Figure 6: Ethernet Cradle (Four Bay)

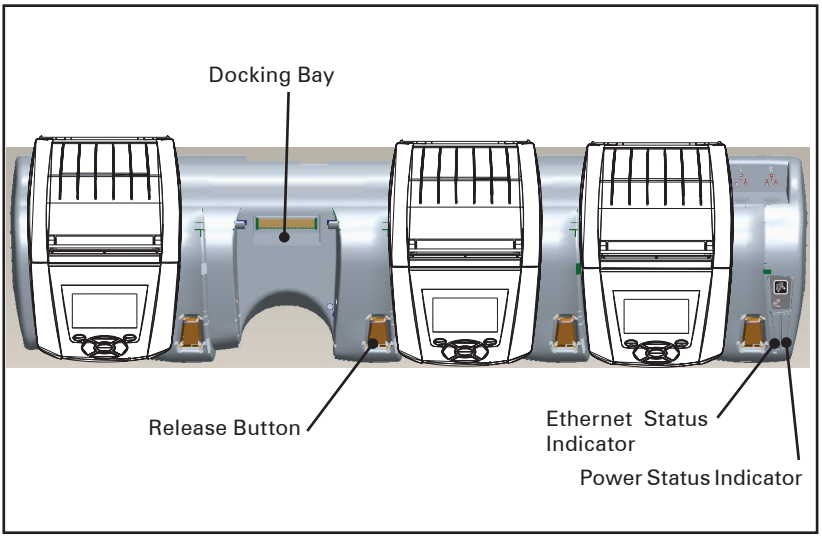

Figure 7: QLn-EC4 Dimensions

Height	Width	Length
66,7 mm (2.62 in.)	579,9 mm (22.83 in.)	150,57 mm (5.93 in.)

Figure 8: Ethernet Cradler (Single Bay)

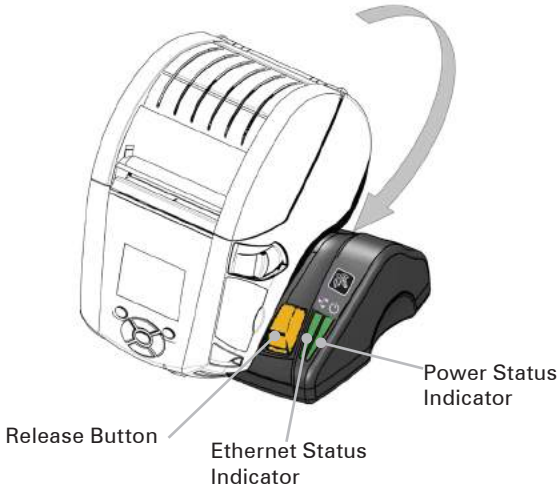

Figure 9: QLn-EC Dimensions

Height	Width	Length
66,7 mm (2.62 in.)	171,28 mm (6.74 in.)	150,57 mm (5.93 in.)

Printer Operation with Cradle

- All QLn Series printers will charge in the cradles
- Only QLn Series printers that have the Ethernet option installed will connect to an Ethernet network. Check the PCC code on the back of the printer (see Appendix D for location). Codes of the form QNX-XXXXX0XX-XX do not support Ethernet, and codes of the form QNX-XXXXXEXX-XX do support Ethernet (where “X” means don’t care). You can also check the “Communications” sub-menu on the LCD (see Main Menu Screen on page 17). After selecting this sub-menu, any communication options not installed will be so indicated.

- When power is applied to the cradle and the printer is docked, the printer charge LED indicates the charge status of the printer (see Figure 14).
- Docking the printer in the cradle will automatically turn the printer on to ensure it is available to be managed remotely.
- When the printer detects input power from the cradle, and the presence of a live Ethernet link, it will automatically reboot and connect to the Ethernet network.
- For printers with an 802.11 radio, this interface will be turned off when the Ethernet link is active. It will turn back on if the Ethernet link is no longer active.
- For printers with a Bluetooth radio, this interface will remain active while the printer is in the cradle.
- The serial and USB ports will remain active while the printer is in the cradle.
- When connected to Ethernet, if either the cradle DC power or the Ethernet link is removed for more than 10 seconds, the printer will reboot.
- The DC input barrel jack connector (see Figure 10) cannot be used while the printer is in the cradle.

AC Power Adapter (included in kit p/n P1031365-024)

Figure 10: Charging the Battery Pack with the AC Power Adapter)

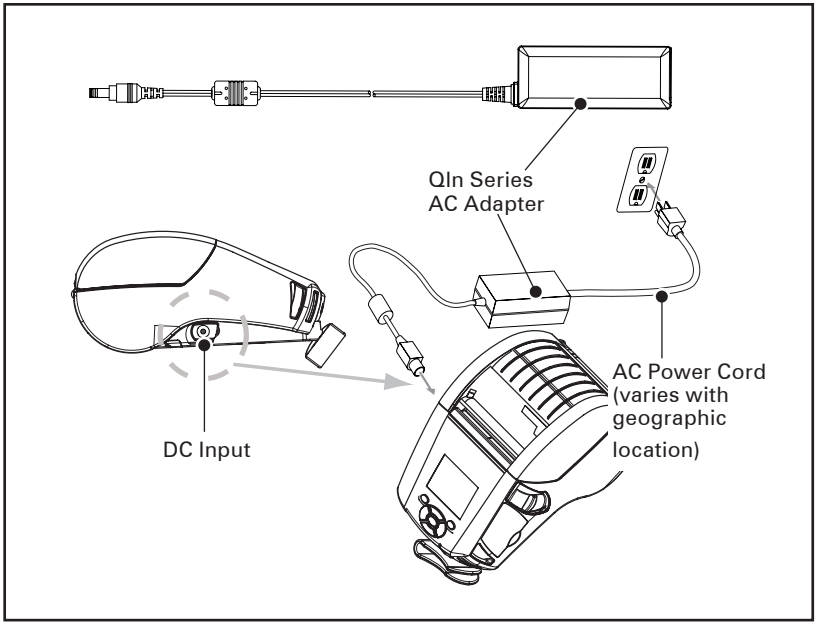

- Open the protective cover on the QLn Series printer to expose the DC input charger jack.
- Connect the appropriate AC power cord for your location to the adapter and then plug the power cord into an AC receptacle.
- Plug the barrel plug from the P1029871 AC adapter into the charger jack on the printer.
- The printer will power up and begin charging. The printer can be left on or turned off at this point. Charging will continue in either state.

Batteries are shipped uncharged. Remove protective shrink-wrap and labels from new battery packs and allow them to charge completely prior to initial use.

While it's possible to charge the battery when using the printer, charge times will increase under this condition.

Loading the Media in the QLn Series Printers

You can operate QLn Series printers in one of two different modes: Tear-Off or Peel-Off. Tear-Off mode allows you to tear off each label (or a strip of labels) after it is printed. In Peel-Off mode, the backing material is peeled away from the label as it is printed. After you remove this label, the next one is printed.

1. Open the printer.

- Press down on the latch release lever on the side of the printer as shown at "1" in Figure 11 below. The Media Cover will open automatically as shown at "2" below, exposing the Media Compartment and the adjustable Media Supports.

Figure 11: Opening the QLn Series Printer

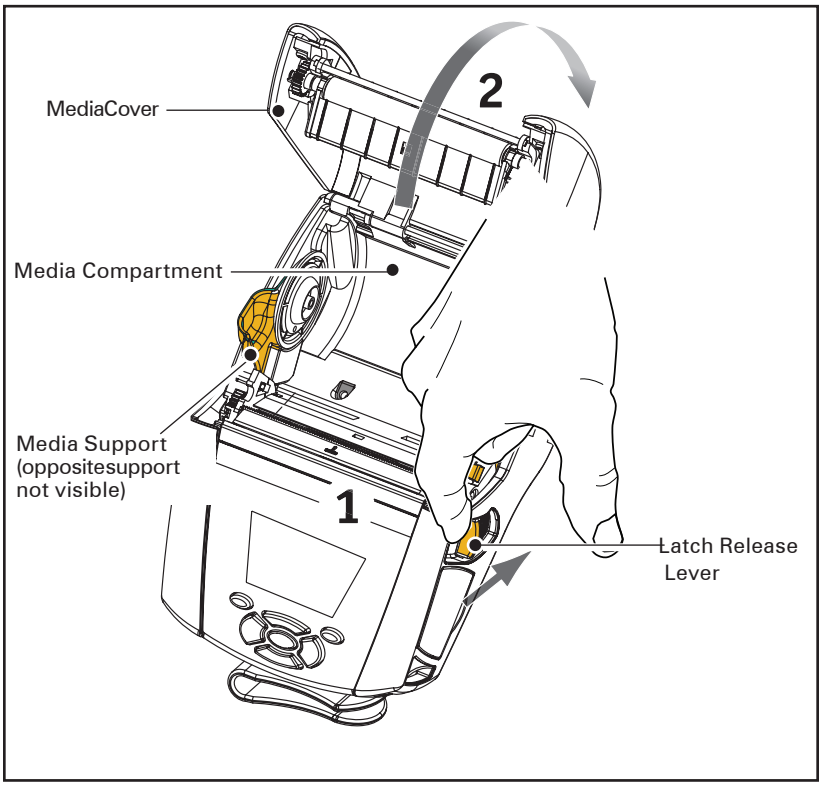

2. Load the media:

- Grasp the media supports where shown in Figure 12 and pull them apart. Insert the roll of media between them, and let the media supports close. Ensure that the media pulls off the core in the direction shown below. The supports will adjust themselves to the width of the media, and the media should be able to spin freely on the supports.

Figure 12: Loading Media

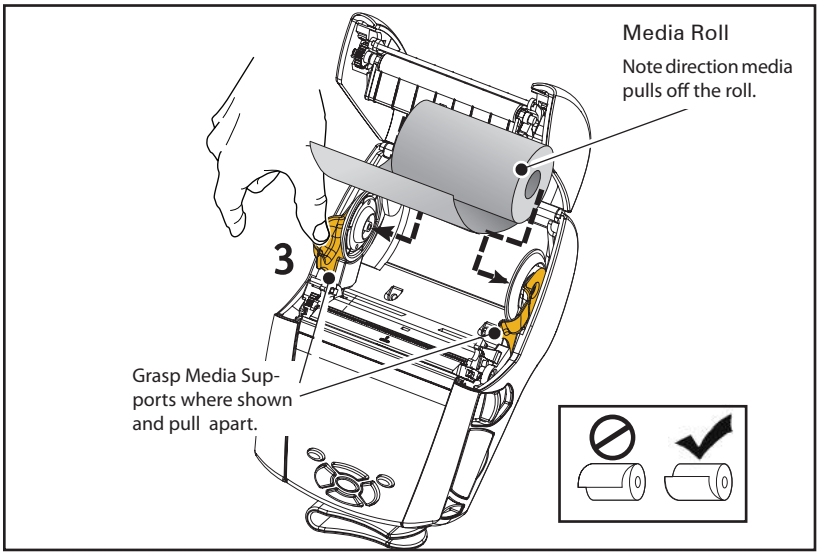

3. Close the Media Cover.

- If you plan to use the printer in the tear-off mode, close the media cover as shown below.

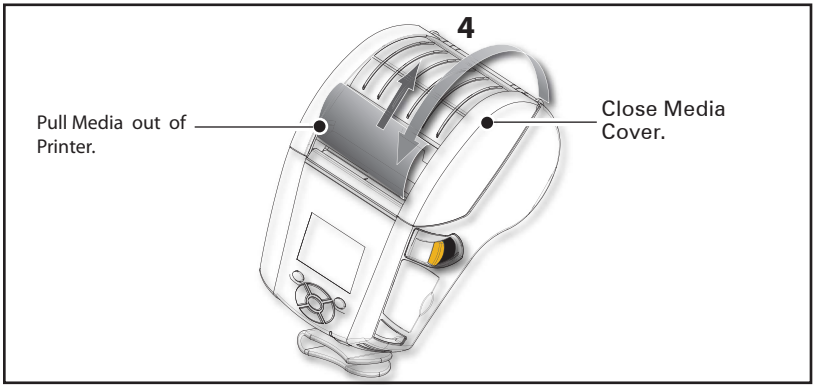

continued

Loading Media in Peel-off Mode

- If you plan to use the printer in the peel-off mode, peel a few labels off of the media and load the media as previously described.
- Push the peeler lever forward to release the peeler bail into the "up" position as shown at "3" and "4" in Figure 13.
- Close the media cover to lock the peeler bail in place. The media will feed between the peeler bail and platen.

Figure 13: Activating Peeler Bar

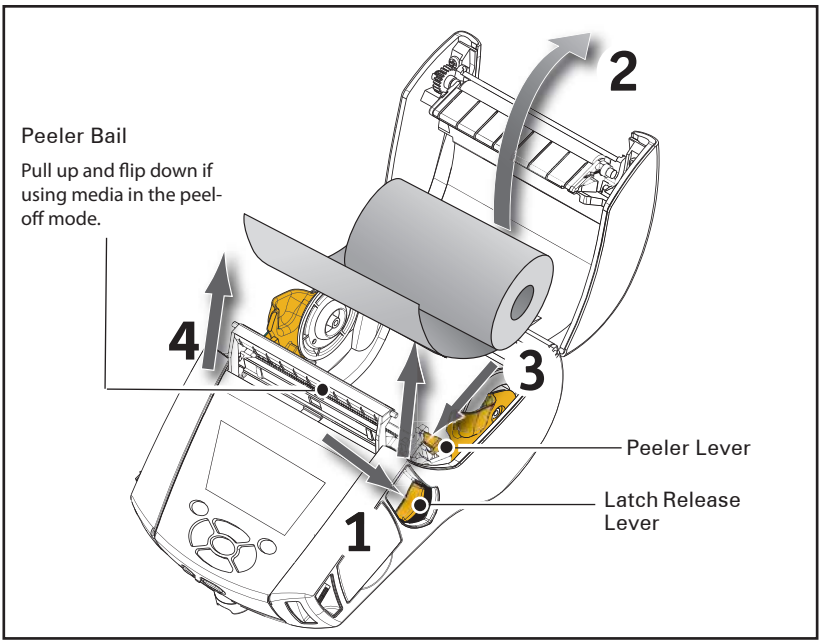

- Turn on the printer or press the Feed button on the front of the printer if the printer is already on.
  The printer will advance the media to the next label, if printing labels. If you are printing on journal media, the printer will advance a short strip of media.

To disengage the peeler bail, first open the media cover as previously described. The peeler bail will automatically return to the Up position.

Press straight down on the peeler bail to lock it in place in its original home position.

Operator Controls

The QLn Series printers come equipped with a keypad control panel and LCD graphical user interface. The standard control panel is illustrated in Figure 14 and 15 on pages 26 and 27. The LCD interface allows easy display and selection of many printer functions as detailed on following pages.

Standard Control Panel

The standard control panel has multiple control buttons and two multipurpose indicators.

- The Power Button turns the printer on and off.
- The Media Feed Button advances a length of media which is determined by the type of media being used. Label media will be advanced to the next gap or bar sense marker. Journal (plain) media will be advanced by a length determined by the printer's software.
- The LED Charge Indicator shows solid Yellow when charging, solid Green when fully charged, and is turned off when there's a fault condition and the printer is plugged in.
- Four Way Navigation Buttons allow the user to scroll between functions on the LCD user space. (The Navigation Buttons do not apply to the Status Bar and Navigation Bar.)
- Enter Button allows the user to select the desired function highlighted on the LCD interface and is indicated by the word "OK".
- Two software defined function keys allow the user to select a function listed on the navigation bar.

continued

Figure 14: Standard Control Panel for QLn Series

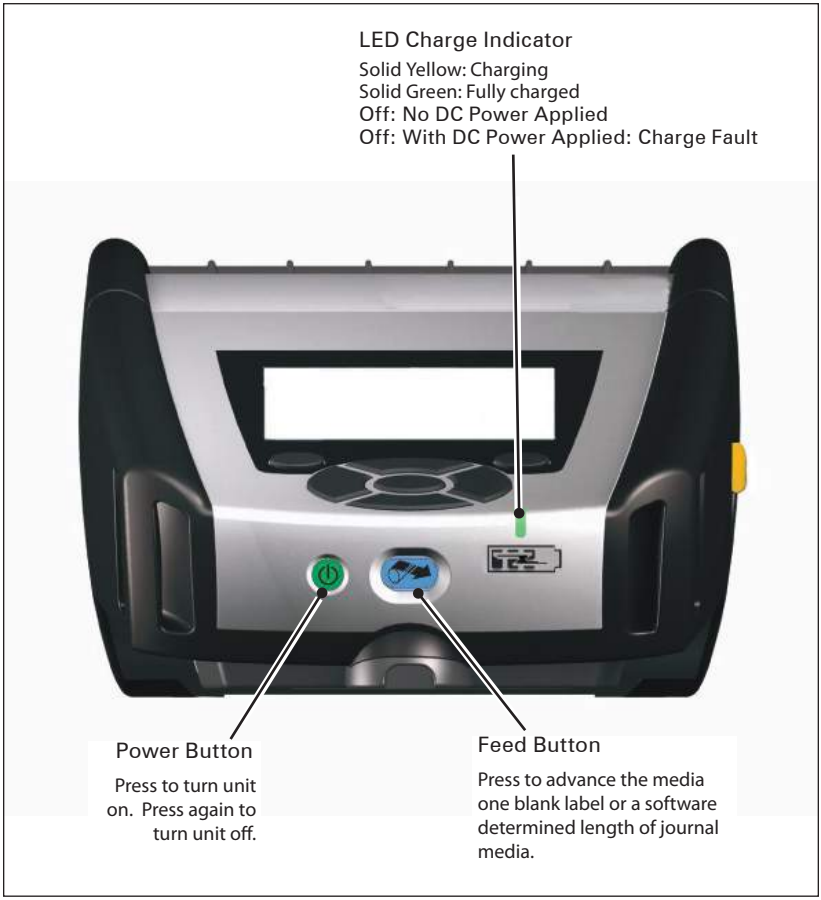

LCD Control Panel

The 240x128 pixel LCD control panel allows the user to view the status of the QLn Series printer and have access to various printer alerts and messages. It also has multi-directional keys which allow navigation and selection of menu options affecting printer functions. These keys allow scrolling through the various options and settings. The “OK” button allows selection of the option or function displayed on the screen.

The top of the screen has a row of status icons, or a Status Bar, which indicate the state of various printer functions. The Status Bar is located above the Status Screen shown below along with a Navigation Bar. The Status Screen is the default display and is shown at power up. When navigating the menus, the printer will automatically return to this screen when the user is done navigating after an appropriate delay.

Figure 15: LCD Control Panel

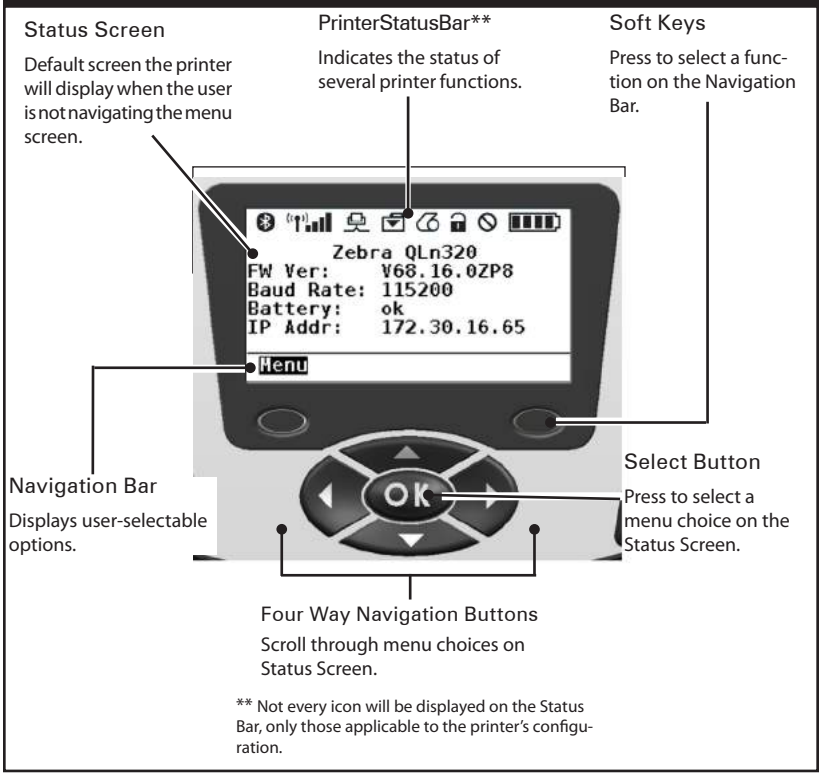

continued

Status Bar Icons

Indicates Bluetooth connection status. The icon will blink to show that the printer is receiving label data via Bluetooth, and is solid when link is established. This icon appears only on printers with the Bluetooth wireless option installed.

Indicates that the printer is connected to a radio network via 802.11 protocols. The antenna icon will blink with no parentheses when looking for an access point. One set of solid parentheses with blinking antenna indicates WLAN is associated and attempting authentication. Two sets of solid parentheses and solid antenna indicate the printer is successfully connected to the WLAN. The icon and two parentheses will blink to show the printer is receiving printer data via WLAN. The four (4) bars indicate the strength of the WLAN connection to the access point. These icons appear only with the 802.11 radio installed.

The Ethernet icon will blink when the printer is receiving label data via the Ethernet connection. It will not be displayed on the status bar when the Ethernet is inactive. This icon appears only when the Ethernet option is installed and the printer is docked in Ethernet cradle.

The Data icon indicates data being sent to the printer, i.e. the icon will blink when there is a label data transmission via the serial or USB ports.

The Media Out icon will blink when there is no media in the printer and will not blink when there is media in the printer.

The Head Latch icon indicates if the media cover is closed or not properly latched. It will appear unlocked and blinking if open and will not appear if the cover is closed.

The Error icon will be displayed and blink if an error condition exists. The icon will not be displayed if no printer error exists. Since there are separate icons for Media Out and Head Latch Open, these two alerts do not apply to the Error icon.

The Battery Charge Level icon indicates the reported state of charge from the battery pack. In a non-charging state, four (4) bars indicates the battery level is greater than 80%. Three (3) bars indicates if the battery level is less than or equal to 80% but greater than 60%. Two (2) bars indicates if the level is less than or equal to 60% but greater than 40%. One (1) bar indicates if the battery level is less than or equal to 40% but greater than 20%. And zero (0) bars indicates if the level is less than or equal to 20%.

While the battery is charging, a lightning bolt will appear in the battery icon to indicate that charging is taking place.

When the battery is charging and fully charged, four bars will be displayed. When the battery is charging and the level is greater than 80%, the battery icon will alternate between four bars and three bars. When the battery is charging and the level is less than or equal to 80% but greater than 60%, the icon will alternate between three bars and two bars. When the battery is charging and the level is less than or equal to 60% but greater than 40%, the icon will alternate between two bars and one bar. When the battery is charging and the level is less than or equal to 40% the icon will alternate between one bar and zero bars.

Main Menu Screen

The user can select options on the Main Menu screen by pressing the soft key located beneath the Menu option on the navigation bar (see Fig. 16). The Main Menu screen displays graphical options including Communication, Display, Media, Battery, and Help.

Figure 16: Main Menu Screen

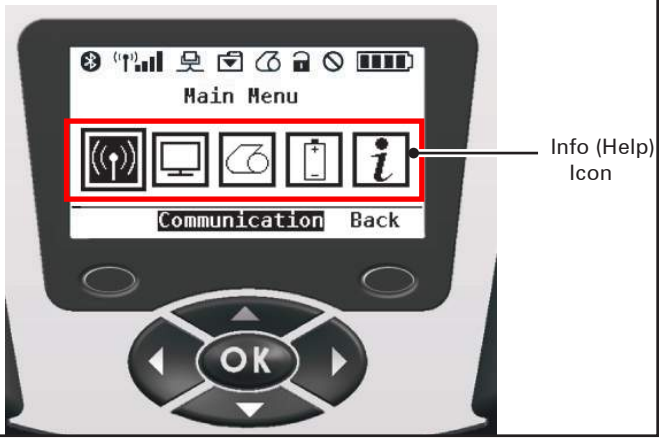

The user can scroll between icons using the four-way arrow buttons. When an icon is highlighted, its text description will be displayed in the middle of the navigation bar, and can be selected by pressing the “OK” button. This will take the user to the screen with status information specific to that option. The Info (or Help) menu provides useful information on a variety of topics. Please explore this menu to become more familiar with your printer and how it operates.

The QLn Series printers will also display various alerts, such as “Media Out”, “Media Cover Open”, or “Battery Low”. The user can respond to questions by pressing one of the soft keys to indicate that an action has been taken to address the alert in question. Once the condition causing the alert has been addressed (i.e. loading media), the alert message will be cleared. (See Appendix G for a complete list of alerts for the QLn Series printers.)

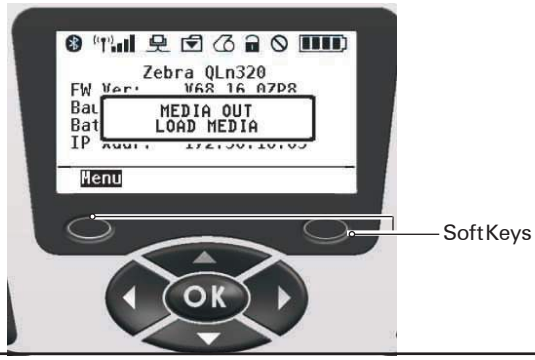

Programmable LCD Settings

In addition to the status icons, the LCD control panel can display other printer settings and functions as text. Applications can be written to allow the user to view and /or modify these settings using the scroll and select keys on the display. The menu that comes with the printer provides access to the most commonly used parameters. Refer to the CPCL Programming Manual for a complete list of the parameters, and for details on how to change the front panel display (p/n P1036975-001 at www.zebra.com/manuals).

The LCD backlighting option allows viewing of the screen in a dark environment, or provides better contrast in a very bright environment. The QLn320 and QLn220 can be programmed to enter a low power mode (Backlight Off) during periods of front panel inactivity. While in low power mode, the screen is populated with menus and status icons, data which may or may not be readable depending on ambient light conditions. The QLn Series printers provide a configurable time delay from the time the backlight is turned on to when it turns off. The time range for this delay is 5 to 1200 seconds with a default time of 10 seconds. The backlight can be activated within one second after any of the cursor, select, or soft keys is pressed. (The feed button does not activate the backlight.) The status bar icons, the user space content, and the navigation bar will remain on the screen with the backlight off. Extensive use of the display backlight will decrease the time the printer can run between charges. Refer to the section “Extending Battery Life” for more information.

Verify the Printer Is Working

Before you connect the printer to your computer or portable data terminal, make sure that the printer is in proper working order. You can do this by printing a configuration label using the "two key" method. If you can't get this label to print, refer to "Troubleshooting".

Printing a Configuration Label

1. Turn the printer off. Load the media compartment with journal media (media with no black bars printed on the back)
2. Press and hold the Feed Button.
3. Press and release the Power button and keep the Feed button pressed. When printing starts, release the Feed button.

The unit will print a line of interlocking "x" characters to ensure all elements of the print head are working, print out the version of software loaded in the printer and then print the report. Note that the report can also be printed from the Info (Help) menu on the LCD.

The report indicates model, serial number, baud rate, and more detailed information on the printer's configuration and parameter settings. (See the Troubleshooting Section for sample printouts and a further discussion on how to use the configuration label as a diagnostic tool.)

Connecting the Printer

The printer must establish communications with a host terminal which sends the data to be printed. Communications occur in four basic ways:

- QLn Series printers can communicate by cable via either RS-232C or USB 2.0 protocols. USB drivers are included in the Zebra Designer Driver which can be downloaded from www.zebra.com/drivers.
- By means of a Bluetooth™ short range radio frequency link. (Optional)
- By means of a wireless LAN (Local Area Network) per 802.11 specifications. (Optional)
- By means of the Ethernet when docked on the Ethernet cradle. (Optional)

Cable Communication

Caution • The printer should be turned off before connecting or disconnecting a communications cable.

The QLn320 and QLn220 printers can communicate by cable; the specific cable supplied with your printer will vary with the host terminal and your model printer.

RS-232C Communications

The 14-pin serial connector on your communications cable plugs into the serial communications port on the side of the printer. QLn Series printers also have a USB port.

USB Communications

The small 5-pin connector on the USB cable plugs into the printer. The connectors are keyed to assure correct alignment; do not try to force the cable if it does not plug in.

Figure 17: Cable Communications

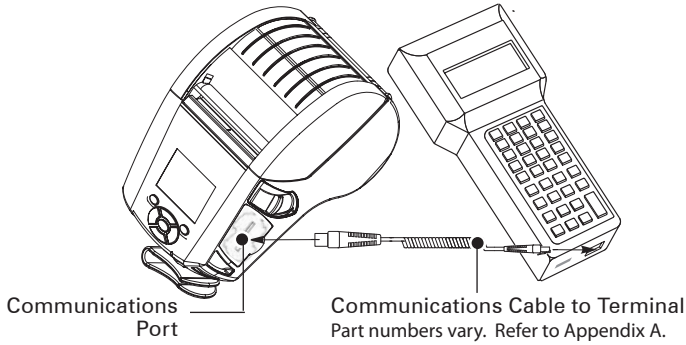

Figure 18: Communications with a P.C.

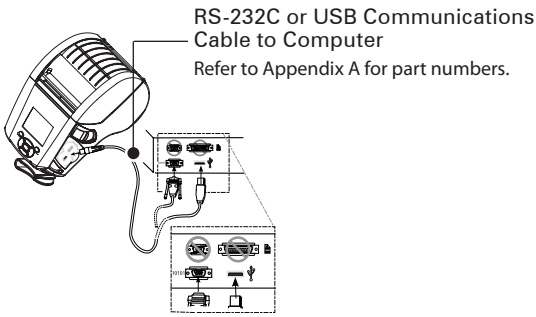

The other end of the cable must be plugged into the host terminal as shown in Figure 18, or to a serial or USB port on a computer (Figure 18). The QLn Series is configured with the USB Open HCI interface driver allowing it to communicate with Windows® based devices.

USB drivers are included in the Zebra Designer Driver which can be downloaded from the Zebra Web site. Other terminals or communications devices may require the installation of special drivers to use the USB connection. Consult the factory for further details.

Providing Strain Relief for Communications Cable

If you are connecting either a USB or RS-232 communications cable to the printer permanently, access the communications port on the side of the printer next to the latch release lever. Plug the connector into the appropriate port and align the plastic locking cap with the cut outs shown below. Rotate the locking cap clockwise to lock the cable in place. (Turn counterclockwise to unlock the cable.) Once locked in place, this provides strain relief for the cable and will prevent the cable from disconnecting from the printer.

Note • Only one cable can be present in the USB/RS-232 communications port at a time for strain relief purposes.

Figure 19: Communications Port

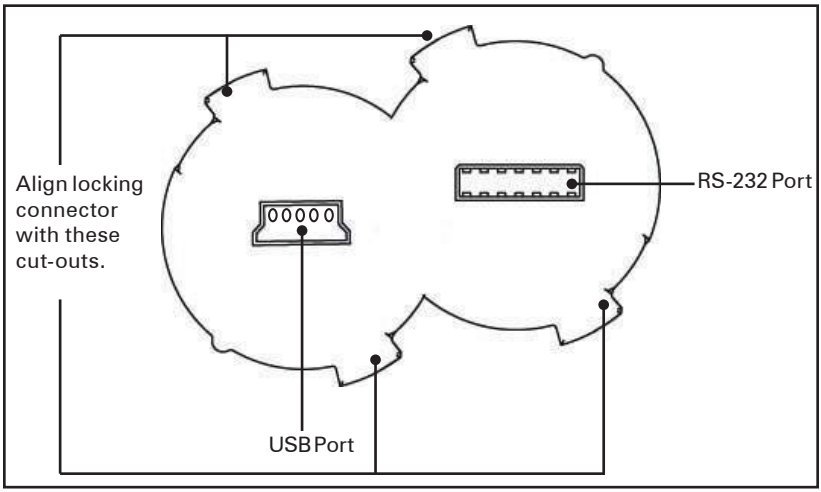

Figure 20: Communications Port Strain Relief

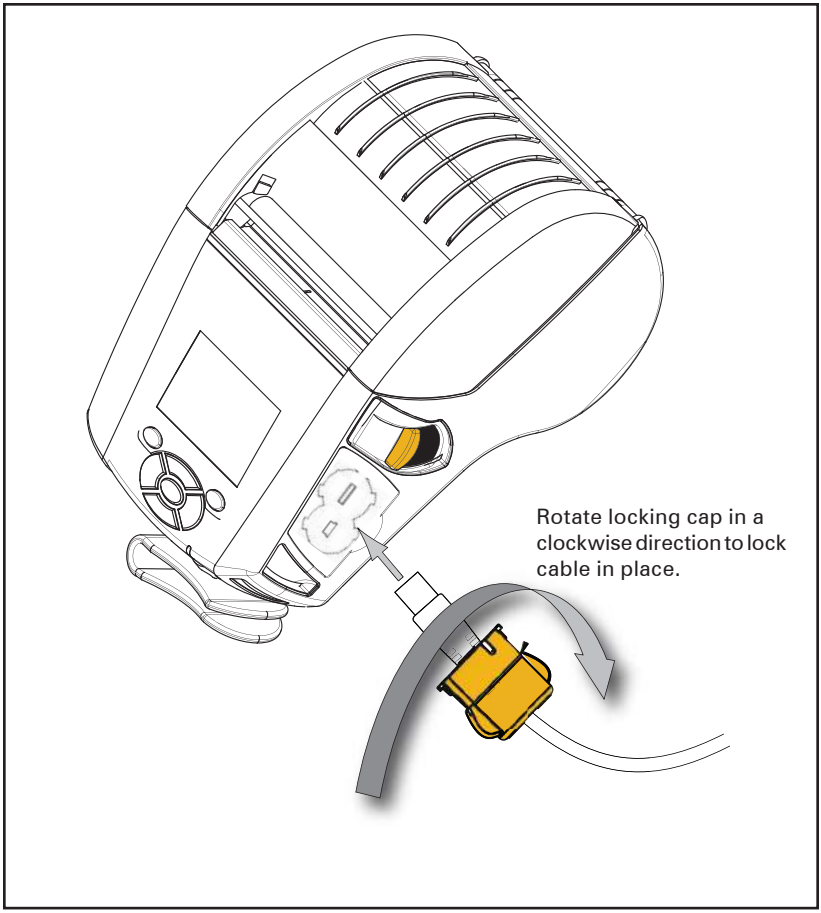

Wireless Communications with Bluetooth™

Bluetooth is a worldwide standard for the exchange of data between two devices via radio frequencies. Bluetooth radios are relatively low powered to help prevent interference with other devices running at similar radio frequencies. This limits the range of a Bluetooth device to about 10 meters (32 feet). Both the printer and the device it communicates with must follow the Bluetooth standard. Other than conditions specified elsewhere in this manual, only one of the radio options can be installed in the printer at one time and the antenna used for these transmitters must not be co-located or must not operate in conjunction with any other antenna.

Bluetooth Networking Overview

Each Bluetooth enabled QLn320 and QLn220 printer is identified by a unique Bluetooth Device Address (BDA). In order to exchange data, two Bluetooth enabled devices must establish a connection.

Bluetooth software is always running in the background, ready to respond to connection requests. One device (known as the master or the client) must request a connection with another. The second device (the slave or the server) then accepts or rejects the connection. A Bluetooth enabled QLn Series printer will normally act as a slave creating a miniature network with the terminal sometimes referred to as a “piconet”.

For the most part, communications using the Bluetooth protocol are initiated and processed without any operator intervention.

continued

WLAN Overview

QLn320 and QLn220 printers can be equipped with a radio using the industry standard 802.11 protocols. They will have the FCC ID number on the serial number label on the back of the unit.

- QLn Series Wireless Network Printers with the Zebra 802.11 WLAN radio module can be identified by the text "Wireless Network Printer" on the serial number label on the back of the printer.
- These printers allow communication as a node within a wireless local area network (WLAN). Methods of establishing communications to the printer will vary with each application.

General information on establishing WLAN communications can be found in the "CPCL Programming Manual" which is available on-line. More information and LAN configuration utilities are included in Zebra's Net Bridge™ program (version 2.8 and later). Net Bridge may be downloaded from the Zebra Web site.

Setting Up the Software

QLn Series printers use Zebra's CPCL and ZPL Programming languages which were designed for mobile printing applications. CPCL and ZPL are fully described in the "CPCL Programming Manual" and the "ZPL Programming Guide" available on-line at www.zebra.com/manuals.

You can also use Designer Pro, Zebra's Windows® based label creation program which uses a graphical interface to create and edit labels in either language.

Refer to Appendix F for tips on downloading the Designer Pro application from Zebra's Web site.

Swivel Belt Clip

Refer to Figure 21. Most QLn320 and QLn220 printers have a belt clip installed as a standard feature. To use: hook the clip over your belt, and ensure that the clip is securely attached to the belt. The belt clip will pivot to allow you to move freely while wearing the printer.

In order to install or remove the Belt Clip you will need to remove the battery pack.

Figure 21: Using the Belt Clip

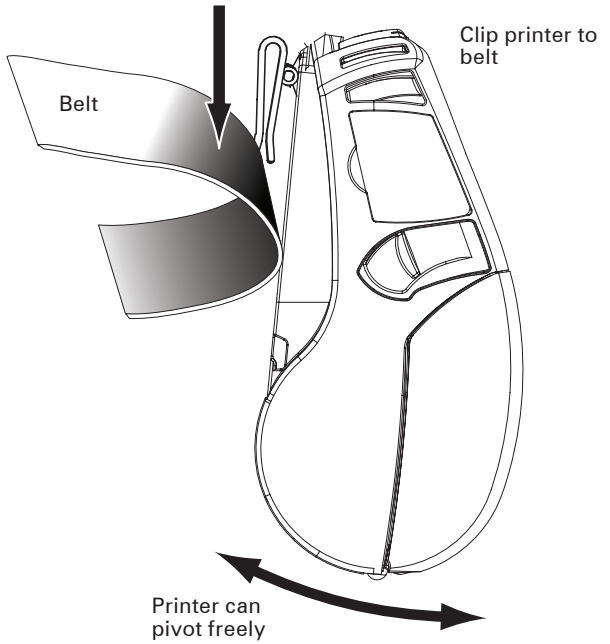

Soft Case

Both the QLn220 and QLn320 have soft case options that also allow you to carry the printer from your belt. The QLn320 soft case can be ordered through accessory kit number P1031365-029 while the QLn220 accessory kit is yet to be determined.

Adjustable Shoulder Strap

Refer to Figure 22 if your printer is equipped with the shoulder strap option (p/n P1031365-026). Insert each end of the shoulder strap into the cut-outs in each top corner of the printer and secure the looped end over the button on the end of the strap to fasten.

Hold the buckle and pull the strap as shown below until you achieve the desired length.

Figure 22: Using the Optional Shoulder Strap

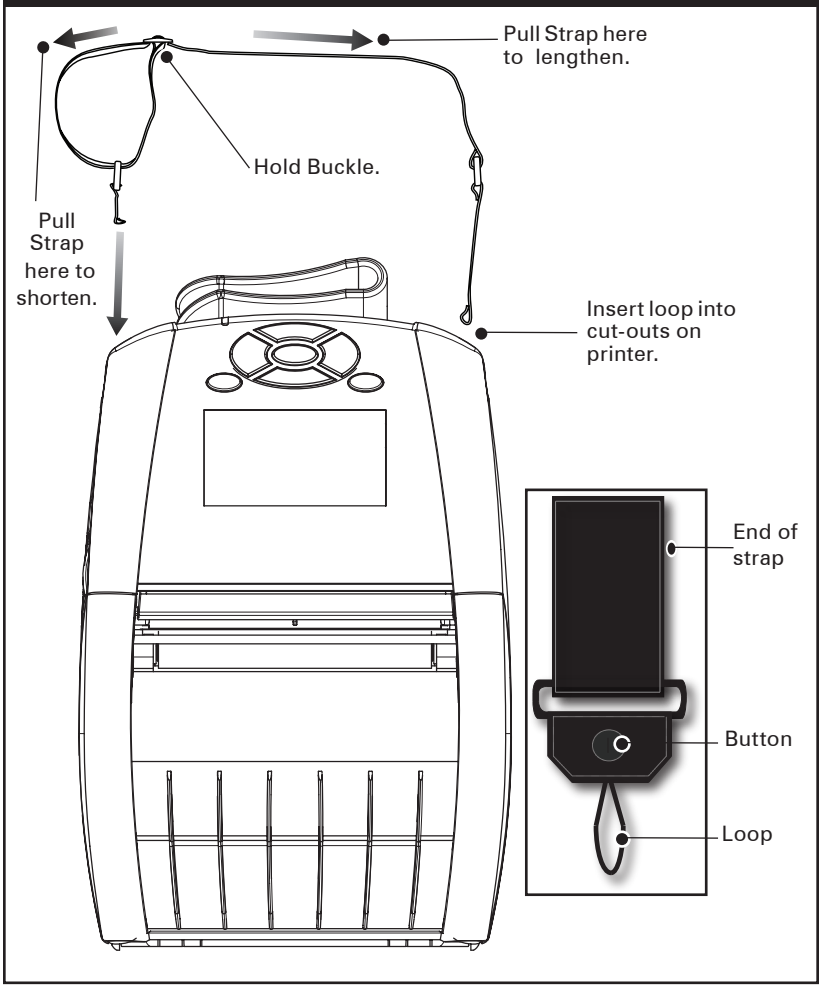

continued

Hand Strap

The QLn Series hand strap accessory (p/n P1031365-027) attaches to the printer's cut-outs as does the shoulder strap to provide the user with a convenient and secure method of carrying the printer. To attach the hand strap to the printer:

- Insert the end of the strap through the cut out on the front of the printer as shown.
- Loop the end of the strap back around the cut out and secure it over the button.
- Repeat this process for the opposite end of the strap.

Figure 23: Detachable Hand Strap

The QLn320 and QLn220 printers also features two mounting holes on the base of the printer to accommodate future mounting options.

Preventive Maintenance

Extending Battery Life

- Never expose the battery to direct sunlight or temperatures over 104° F (40° C).
- Always use a Zebra charger designed specifically for Lithium-Ion batteries. Use of any other kind of charger may damage the battery.
- Use the correct media for your printing requirements. An authorized Zebra re-seller can help you determine the optimum media for your application.
- If you print the same text or graphic on every label, consider using a pre-printed label.
- Choose the correct print darkness, and print speed for your media.
- Use software handshaking (XON/XOFF) whenever possible.
- Remove the battery if the printer won't be used for a day or more and you're not performing a maintenance charge.
- Consider purchasing an extra battery.
- Remember that any rechargeable battery will lose its ability to maintain a charge over time. It can only be recharged a finite number of times before it must be replaced. Always dispose of batteries properly. Refer to Appendix E for more information on battery disposal.

General Cleaning Instructions

Caution • Avoid possible personal injury or damage to the printer: never insert any pointed or sharp objects into the printer.
Always turn the printer off before performing any cleaning procedures.
Use care when working near the tear bar. The edges are very sharp.

Caution • The printhead can be very hot after prolonged printing. Allow it to cool off before attempting any cleaning procedures.

Only use the cleaning pen supplied with the printer or a cotton swab saturated with alcohol for cleaning the printhead.

Caution • Use only cleaning agents specified in the following tables. Zebra Technologies Corporation will not be responsible for damage caused by any other cleaning materials used on this printer.

QLn Series Cleaning

Area	Method	Interval
Printhead (Figure 24)	Use the supplied cleaning pen or 70% Isopropyl alcohol on a cotton swab to clean the print elements from end to end (the print elements are located in the thin gray line on the printhead).	After every five rolls of media (or more often, if needed), Linerless media requires more frequent cleaning
Platen Roller (Figure 24)	Rotate the platen roller and clean it thoroughly with the cleaning pen or 70% Isopropyl alcohol and a cotton swab.	
Platen Roller (Figure 25)	Units with linerless platens: Rotate platen & clean bearing points only. Avoid use of alcohol on the surface of linerless platens	
Peel bar (Figure 24)	Clean thoroughly with the cleaning pen or 70% Isopropyl alcohol and a cotton swab.	As needed
Tear bar (Figure 24)		As needed
Exterior	Water-dampened cloth or 70% Isopropyl alcohol wipe.	As needed
Interior (Figure 24)	Brush/air blow. Ensure the Bar Sensor, Gap Sensor and Label Present Sensor windows are free of dust.	
Interior (Figure 25)	Units with linerless platens: Clean inside surfaces of edge guides & media rollers with the supplied cleaning pen or 70% Isopropyl alcohol on a cotton swab.	After every five rolls of media (or more often, if needed)

Figure 24: Cleaning the QLn Series Printers

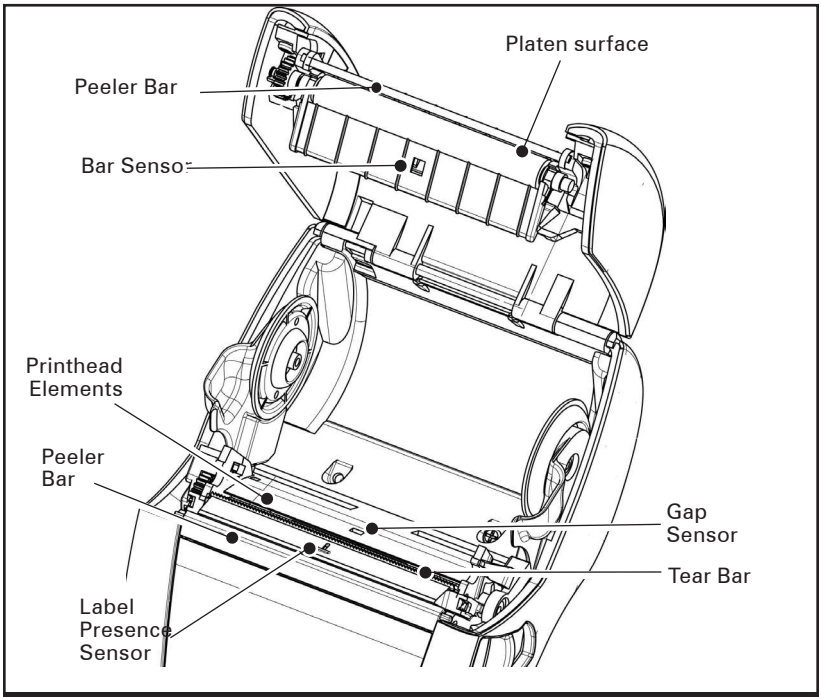

Figure 25: Cleaning the Linerless QLn Series Printers

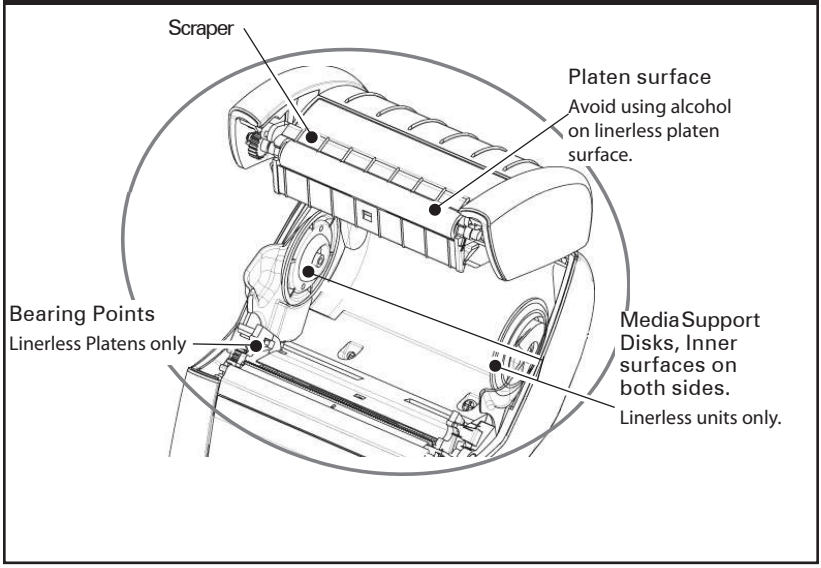

Figure 26 QLn Series Control Panel

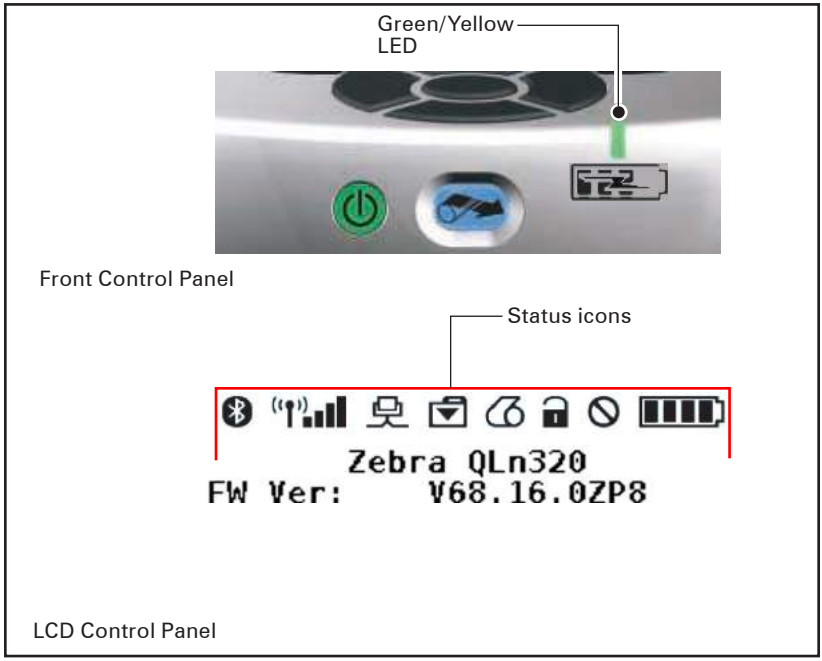

Front Control Panel

If the printer is not functioning properly, refer to the chart below to find the state of the LED charge indicator on the Front Control Panel. Then refer to the Troubleshooting topic referenced in the chart to resolve the problem. Please note that the charge LED is only on when DC power is applied to the printer. If no DC power is applied the LED is off, which does not apply to the table below.

Green	Yellow	Indication	Ref. to Topic
Solid	Off	Fully charged	n/a
Off	Solid	Charging	n/a
Off	Off	Fault	1

LCD Control Panel Indicators

The top of the display shows several icons which indicate the status of various printer functions. Check the indicator status, then refer to the Troubleshooting topic referenced in the chart to resolve the problem.

Icon	Status	Indication
	On	Bluetooth Link established
	Not Present	Bluetooth Link inactive
	Blinking	Connecting or Transmitting Labels
	Antenna Blinking	Looking for AP
	Antenna Blinking/1 Parenthesis Solid	WLAN Associated & Attempting Authentication
	Antenna and 2 Parentheses Solid	WLAN Associated and Authenticated
	Antenna and 2 Parentheses Blinking	Receiving Data
	Not Present	No Radio Present
	4 Bars	>80% Charged
	3 Bars	60%-80% Charged
	2 Bars	40%-60% Charged
	1 Bar	20%-40% Charged
	0 Bars	Low Battery
	4 Blinking w/ Lightning Bolt	Charging >80% Capacity
	3 Blinking w/ Lightning Bolt	Charging 60-80% Capacity
	2 Blinking w/ Lightning Bolt	Charging 40-60% Capacity
	1 Blinking w/ Lightning Bolt	Charging 20-40% Capacity
	0 Bars w/ Lightning Bolt	Charging <20% Capacity
	Blinking	Media cover open
	Blinking	Receiving data
	Solid	Ethernet Connected
	Not Present	No Ethernet Connection

continued

	Blinking	Data processing in progress
	Steady	No data being processed
	Blinking	Out of Media
	Steady	Media present
	Blinking	Error exists (excluding Media Out and Head Latch Open)
	Not Present	No error exists
	4 Bars	802.11 signal strength > 75%
	3 Bars	802.11 signal strength </= 75%
	2 Bars	802.11 signal strength </= 50% but >25%
	1 Bar	802.11 signal strength </= 25%
	0 Bars	No Signal Strength

Troubleshooting Topics

1. No power
   - Check that battery is installed properly.
   - Recharge or replace battery as necessary.

Always dispose of batteries properly. Refer to Appendix E for more information on proper battery disposal.

2. Media does not feed:
   - Be sure print head is closed and latched.
   - Check spindle holding media for any binding.
   - Ensure most recently printed label is removed (only in peel mode).
   - Also ensure label sensor is not blocked.
3. Poor or faded print:
   - Clean print head.
   - Check quality of media.
4. Partial or missing print:
   - Check media alignment
   - Clean print head.
   - Ensure printhead is properly closed and latched.
5. Garbled print:
   - Check baud rate.

6. No print:

- Check baud rate.
- Replace battery.
- Check cable to terminal.
- Establish RF Link (Wireless units only) and/or restore LAN associativity (Printers with WLAN radios only).
- Invalid label format or command structure. Place printer in Communications Diagnostic (Hex Dump) Mode to diagnose problem.

7. Reduced battery charge life

- Check battery date code — if battery is older than 1 year old, short charge life may be due to normal aging.
- Check battery health.
- Replace battery.

8. flashing:

- Flashing indicator is normal while data is being received.

9. or flashing:

- Check that media is loaded and that the media cover is closed and securely latched.

10. Skips labels:

- Check media for top of form sense mark or label gap.
- Check that the maximum print field has not been exceeded on label.
- Ensure bar or gap sensor is not blocked or malfunctioning

11. Communication error:

- Check baud rate.
- Replace cable to terminal.

12. Label jam:

- Open head release latch and media cover.
- Remove and reinstall media.

13. Blank LCD screen

- Make sure printer is turned on.
- No application loaded or application corrupted: reload program.

Troubleshooting Tests

Printing a Configuration Label

To print out a listing of the printer's current configuration follow these steps:

1. Turn the printer off. Load the media compartment with journal media (media with no black bars printed on the back).
2. Press and hold the Feed Button.
3. Press and release the Power button and keep the Feed button pressed. When printing starts, release the Feed button.

Note • The configuration report can also be printed from the Info (Help) menu on the LCD.

Refer to Figures 27a, b, and c for sample configuration printouts.

Communications Diagnostics

If there is a problem transferring data between the computer and the printer, try putting the printer in the Communications Diagnostics Mode (also referred to as the "DUMP" mode). The printer will print the ASCII characters and their text representation (or the period '.', if not a printable character) for any data received from the host computer.

To enter Communications Diagnostics Mode:

1. Print a configuration label as described above.
2. At the end of the diagnostics report, the printer will print: "Press FEED key to enter DUMP mode".
3. Press the FEED key. The printer will print: "Entering DUMP mode".

Note • If the FEED key is not pressed within 3 seconds, the printer will print "DUMP mode not entered" and will resume normal operation.

4. At this point, the printer is in DUMP mode and will print the ASCII hex codes of any data sent to it, and their text representation (or "." if not a printable character).

Additionally, a file with a ".dmp" extension containing the

ASCII information will be created and stored in the printer's memory. It can be viewed, "cloned" or deleted using the Net Bridge application. (Refer the Net Bridge documentation for more information.)

To terminate the Communications Diagnostics Mode and return the printer to normal operations:

1. Turn the printer OFF.
2. Wait 5 seconds.
3. Turn the printer ON.

Contacting Technical Support

If the printer fails to print the configuration label, or you encounter problems not covered in the Troubleshooting Guide, contact Zebra Technical Support. Technical Support addresses and phone numbers for your area can be found in Appendix D of this manual. You will need to supply the following information:

- Model number and type (e.g. QLn320)
- Unit serial number (Found on the large label on the back of the printer, also found in the configuration label printout.
- Product Configuration Code (PCC) (15 digit number found on the label on the back of the unit)

Figure 27a: QLn Series Configuration Label Example (QLn320 Shown)

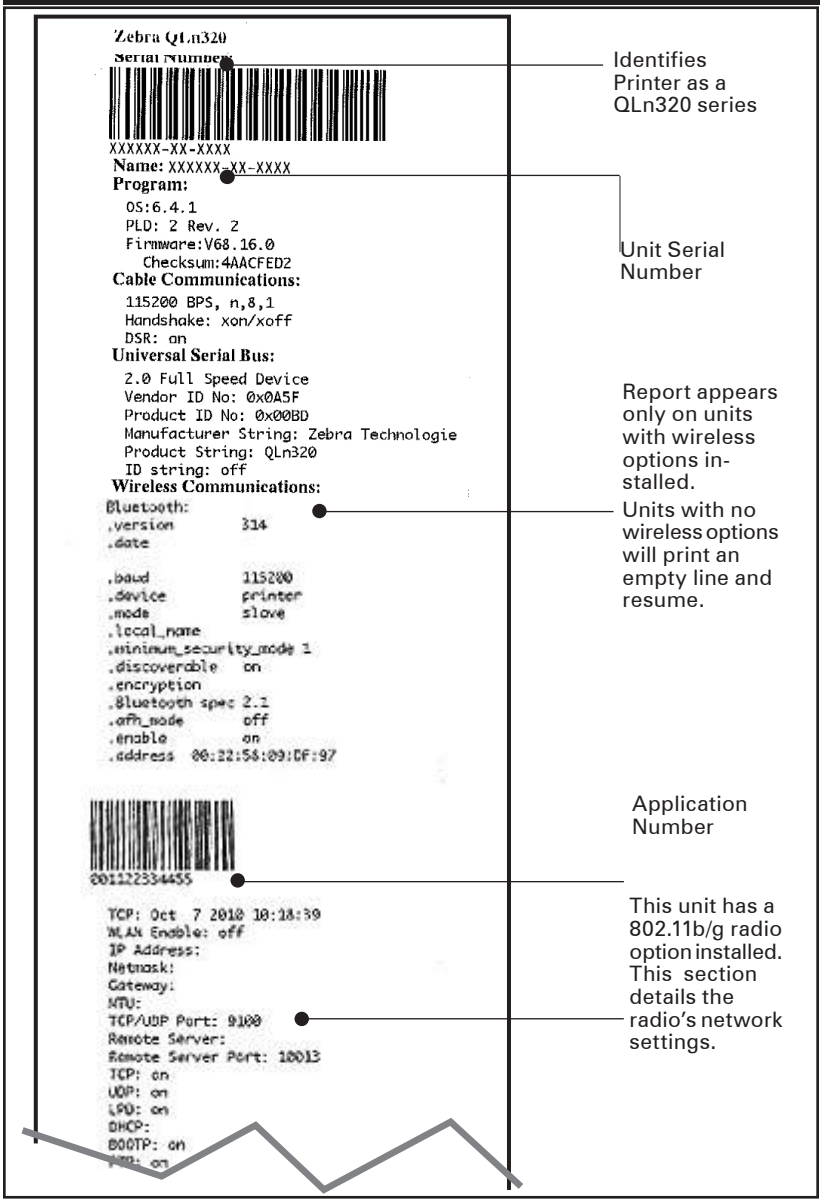

Note • Wireless configuration settings may not print correctly when using the Power and Feed key method of printing as the radio takes time to initialize before these settings are valid. To get the correct setting, turn the printer on, wait 60 seconds, and then print the report from the Info (Help) menu.

Figure 27b: Configuration Label Example (continued)

Peripherals:

```
LCD: Installed
Expansion module: 0x02
 802.11 b/g Embedded Module
```

Power Management:

```
In-activity Timeout:0
Low-battery Timeout:60
Remote(DTR) pwr-off:Disabled
Voltage          :8.35
Low-bat Warning  :7200(7.20V)
Low-bat Shut-down:6800(6.80V)
Power On Cycles  :0
Battery Health   :good
```

Memory:

```
Flash :201326592 Bytes
RAM   :134217728 Bytes
```

Label:

```
Width :406 dots, 50 mm
Height:0 dots, 0 mm
```

Resident Fonts:

Font	Sizes	Chars
0	0- 6	20-FF
1	0	20-80
2	0- 1	20-59
4	0- 7	20-FF
5	0- 3	20-FF
6	0	20-44
7	0- 1	20-FF

File Directory:

```
File              Size
---------------  ---------

E:INDEX.HTM          7151
E:INDEX.WML           509
E:index.shtml           0
E:logo.png              0
Z:0.TTF            125880
Z:A.FNT              6839
Z:AZTEC.BAR             0
Z:B.FNT              7746
Z:BATTERY.WML        1270
Z:BATTERY_CHARGING_LEVEL_0_BAR_ICON.B
192
Z:BATTERY_CHARGING_LEVEL_1_BAR_ICON.B
192
Z:BATTERY_CHARGING_LEVEL_2_BAR_ICON.B
192
Z:BATTERY_CHARGING_LEVEL_3_BAR_ICON.B
192
Z:BATTERY_CHARGING_LEVEL_4_BAR_ICON.B
192
Z:BATTERY_LEVEL_0_BAR_ICON.BMP
Z:BATTERY_LEVEL_1_BAR_ICON.BMP
Z:BATTERY_LEVEL_2_BAR_ICON.BMP
Z:BATTERY_LEVEL_3_BAR_ICON.BMP
Z:BATTERY_LEVEL_4_BAR_ICON.BMP
Z:BATTERY_MENU_ICON.BMP        430
Z:BLUETOOTH.WML       1178
Z:BLUETOOTH_ICON.BMP        128
Z:BLUETOOTH_NOT_AVAILABLE_ICON.BMP
Z:BTPAIRING.WML       1176
Z:CODABAR.BAR           0
Z:CODABLK.BA            0
Z:CODE11                0
```

Peripherals installed: In this example the 802.11 option is installed.

Flash and RAM Memory Installed

Maximum Label Size

Resident Human Readable fonts installed.

continued

Figure 27c: Configuration Label Example (continued)

File Directory:

```
File            Size
--------------- ---------

E:INDEX.HTM         7151
E:INDEX.WML          509
E:index.shtml          0
E:logo.png             0
Z:0.TTF           125880
Z:A.FNT             6839
Z:AZTEC.BAR            0
Z:B.FNT             7746
Z:BATTERY.WML       1270
Z:BATTERY_CHARGING_LEVEL_0_BAR_ICON.B
```

Command Language:

```
CCL Key '!'[21]
ZPL Configuration Information
TEAR OFF.........Print Mode
Mark............Media Type
0................Darkness
+00.........Tear Off Adjust
1223...........Label Length
104mm..........Print Width
7Eh.........Control Prefix
5Eh.........Format Prefix
2Ch.............Delimiter
00............Top Position
calibrate....Media Power Up
01........Media Head Close
0..............Left Margin
832...........Dots per row
End ZPL Configuration

End of report.
```

Files Loaded in Printer Memory (will include Pre-scaled or Scalable Fonts).

Specifications

Note • Printer specifications are subject to change without notice.

Printing Specifications

Parameter	QLn320	QLn220
Print Width	Up to 2.91 in. (74 mm)	Up to 1.89 in. (48 mm)
Print Speed	4 in./second (101,6 mm/second) without peeler	Same
	2 in./second (50,8 mm/second) with peeler	Same
Printhead Burn Line to Tear Edge Distance	0.20 in. (5,08 mm)	0.17 in. (4,31 mm)
Print Head Life, calculated	1 million inches of paper fed	Same
Print Density	203 dots/in.	Same

Memory and Communications Specifications for QLn Series

Flash Memory	256 MB Flash [1]
RAM Memory	128 MB RAM [1]
Standard Communications	RS-232 serial port (14 Pin serial connector) Configurable Baud rate (from 9600 to 115.2 Kbps), parity and data bits. Software (X-ON/X-OFF) or hardware (DTR/STR) communication handshake protocols.
	USB 2.0 Full Speed Interface (12 Mbps)
Optional Wireless Communications	Bluetooth v2.1 compatible 2.4 GHz SRRF link
	Optional wireless LAN capabilities comply with802.11b/g protocols
Real Time Clock (RTC)	Time and date under application control. Refer to CPCL and ZPL Programming Manuals, available at www.zebra.com/manuals for RTC commands.
Ethernet	10 or 100 mps Ethernet auto detect when docked in cradle.

1. Memory configuration on your printer may be ascertained by printing a configuration label as detailed on pages 48.

Label Specifications

Parameter	QLn320	QLn220
Media Width	1.0 in. to 3.125 in. (38,1 to 78,4 mm)	.63 in to 2.18 in. (16 mm to 55,37 mm)
Max/Min Label Length	0.5 in. minimum to 32 in. maximum	Same
Black Bar Sensor to Printhead Burn Line Distance.	0.56 in. (14,22 mm)	0.53 in. (13,46 mm)
Label Thickness	0.0023 in to 0.0065 in (0.058 mm to 0.165 mm)	0.0023 in. to 0.0055 in. (0.058mm to 0.140 mm)
Tag Thickness	0.0055 in. (0.152 mm) maximum	Same
Max. Label Roll dia.	2.6 in. (66,8 mm) O.D.	2.2 in. max (55,8 nn) O.D.
Label Inner Core**	0.75 in. (19 mm) or 1.38 in (35,05 mm) minimum dia. for linered	Same
	1.38 in. (35,05 mm) minimum dia. for linerless media	Same
Black Mark Location	The reflective media black marks should be centered on the media roll.	Same
Black Mark Dimensions	Minimum mark width: 0.5 in. (12,7 mm) perpendicular to inside edge of media, centered within the width of the roll. Mark length: 0.12 in. to 0.43 in. (3-11 mm) parallel to inside edge of media	Same

Use Zebra brand direct thermal media that is outside wound. Media may be reflective (black mark) sensing, or transmissive (gap) sensing, die-cut, continuous, or linerless.

For die-cut labels, use only full auto dies.

** QLn Series printers support coreless media which is 0.75 in. (19 mm) in inner diameter.

CPCL Font and Bar Code Specifications and Commands

Standard Fonts	25 bit-mapped fonts; 1 scalable font (CG Trimvirate Bold Condensed*) *Contains UFST from Agfa Monotype Corporation Downloadable optional bit-mapped & scalable fonts via Net Bridge software.	
Available Optional Fonts	Optional International character sets: Chinese 16 x 16 (trad), 16 x 16 (simplified),24 x 24 (simplified); Japanese 16 x 16, 24 x 24	
Linear Bar Codes Available	Barcode (CPCL Command)	
	Aztec (AZTEC)	
	Codabar (CODABAR, CODABAR 16)	
	UCC/EAN 128 (UCCEAN128)	
	Code 39 (39, 39C, F39, F39C)	
	Code 93 (93)	
	Code 128 (128)	
	EAN 8, 13, 2 and 5 digit extensions (EAN8, EAN82, EAN85, EAN13, EAN132, and EAN135)	
	EAN-8 Composite (EAN8)	
	EAN-13 Composite (EAN13)	
	Plessey (PLESSEY)	
	Interleaved 2 of 5 (I2OF5)	
	MSI (MSI, MSI10, MSI1110)	
	FIM/POSTNET (FIM)	
	TLC39 (TLC39)	
	UCC Composite A/B/C (128(Auto))	
	UPCA, 2 and 5 digit extensions (UPCA2 and UPCA5)	
	UPCA Composite (UPCA)	
	UPCE, 2 and 5 digit extensions (UPCE2 and UPCE5)	
	UPCE Composite (UPCE)	
2-D Bar Codes Available	MaxiCode (MAXICODE)	
	PDF 417 (PDF-417)	
	Datamatrix (using ZPL emulation) (DATAMATRIX)	
	QR Code (QR)	
	RSS:	RSS-14 (RSS-Subtype 1)
		RSS-14 Truncated (RSS-Subtype 2)
		RSS-14 Stacked (RSS-Subtype 3)
		RSS-14 Stacked Omnidirectional (RSS-Subtype 4)
		RSS Limited (RSS-Subtype 5)
		RSS Expanded (RSS-Subtype 6)
Rotation Angles	0°, 90°, 180°, and 270°	

ZPL Font and Bar Code Specifications and Commands

Standard Fonts	15 bit-mapped fonts; 1 scalable font (CG Trimvirate Bold Condensed*) Downloadable optional bit-mapped & scalable fonts via Net Bridge software.
Available Optional Fonts	Zebra offers font kits covering multiple languages including Simplified and Traditional Chinese, Japanese, Korean, Hebrew/Arabic, and others.
Linear Bar Codes Available 2-D Bar Codes Available	**Barcode (ZPL Command)**
	Aztec (^B0)
	Codabar (^BK)
	Codablock (^BB)
	Code 11 (^B1)
	Code 39 (^B3)
	Code 49 (B4)
	Code 93 (^BA)
	Code 128 (^BC)
	DataMatrix (^BX)
	EAN-8 (^B8)
	EAN-13 (^BE)
	GS1 DataBar Omnidirectional (^BR)
	Industrial 2 of 5 (^BI)
	Interleaved 2 of 5 (^B2)
	ISBT-128 (^BC)
	LOGMARS (^BL)
	Micro-PDF417 (^BF)
	MSI (^BM)
	PDF-417 (^B7)
	Planet Code (^B5)
	Plessey (^BP)
	Postnet (^BZ)
	Standard 2 of 5 (^BJ)
	TLC39 (^BT)
	UPC/EAN extensions (^BS)
	UPC-A (^BU)
	UPC-E (^B9)
	Maxi Code (^BD)
	QR Code (^BQ)
Rotation Angles	0°, 90°, 180°, and 270°

*Contains UFST from Agfa Monotype Corporation

Communications Ports

RS-232C

Pin#	Signal Name	Type	Description
1	CTS	input	Clear To Send from host
2	TXD	output	Transmit Data
3	RXD	input	Receive Data
4	DSR	input	Data Set Ready: low to high transition turns printer on, high to low transition turns printer off (if enabled)
5	GND		Ground
6	DTR	output	Data Terminal Ready: set high when printer is on. Switched 5V (300mA max)
7	N/A		Do Not Use
8	RTS	output	Request To Send set high when printer is ready to accept a command or data
9	N/A		Do Not Use
10	N/A		Do Not Use
11	N/A		Do Not Use
12	N/A		Do Not Use
13	N/A		Do Not Use
14	N/A		Do Not Use

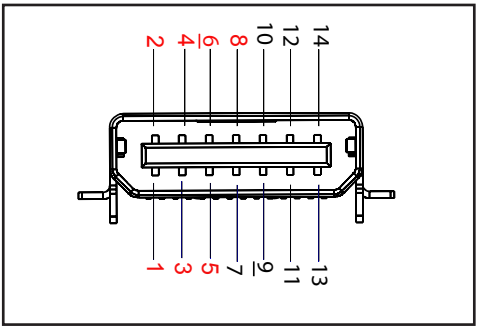

Figure 28: RS-232C Communications Port

USB

Pin #	Signal Name	Type	Description
1	VBUS	-	USB Bus Power
2	USB -	bi-directional	I/O signals
3	USB +	bi-directional	I/O signals
4	USB_ID	-	Identifies A/B connector
5	Return		Ground

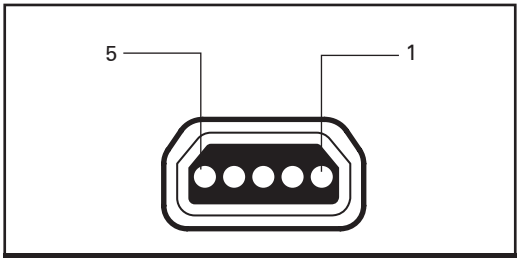

Figure 29: USB Communications Port

Physical, Environmental and Electrical Specifications

Parameter	QLn320	QLn220
Weight w/ battery,excluding media & wireless options.	1.60 lbs. (0.75 kg.)	1.35 lbs. (0.61 kg.)
Temperature	Operating : -4° to 122° F (-20° to 50° C)	Same
	Storage: -13° to 149° F (-25° to 65° C) Range Charging: 32° to 104° F (0° to 40° C)	Same
Relative Humidity	Operating: 10% to 80% (non-condensing)	10% to 90% (non-condensing)
	Storage: 10% to 90% (non-condensing)	Same
Battery	Lithium-Ion, 7.4 VDC (nominal); 2.45 AHr min.	Same
Intrusion Protection (IP) Rating	IP43 (without optional environmental case) IP54 (with case)	TBD (without optional environmental case) IP54 (with case)

Figure 30: QLn320 Overall Dimensions

Figure 31: QLn220 Overall Dimensions

QLn Series Accessories

Description
Adjustable shoulder strap: Kit p/n P1031365-026
Hand Strap: Kit p/n P1031365-027
Protective soft case: Kit p/n P1031365-029 (QLn320); includes shoulder strap; TBD (QLn220)
Extra battery packs: Kit p/n P1031365-025
Ethernet Cradle: p/n P1031365-033 (US line cord, see Sales for others)
Quad Ethernet Cradle: TBD (US line cord, see Sales for others)
SC2 Smart Single Battery Charger: TBD (US line cord, see Sales for others)
AC Power Adapter: p/n P1031365-024 (US line cord, see Sales for others)
Model UCLI72-4 Quad Battery Charger (100-240 VAC input): p/n AC18177-5 (US line cord, see Sales for others)

Refer to Appendix A for information on Data I/O Cables

For more accessory kit details and order numbers, contact the factory or your authorized Zebra re-seller.

Appendix A

Interface Cables

RS232 Cables

Part Number P1031365-053; DB-9 to 14-Pin Serial

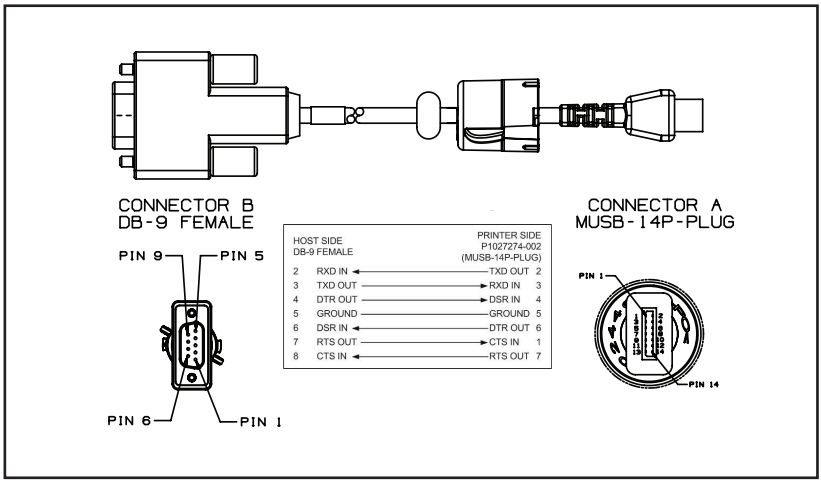

Part Number P1031365-052; 8-Pin DIN to 14-Pin Serial Cable (QL Adapter Cable)

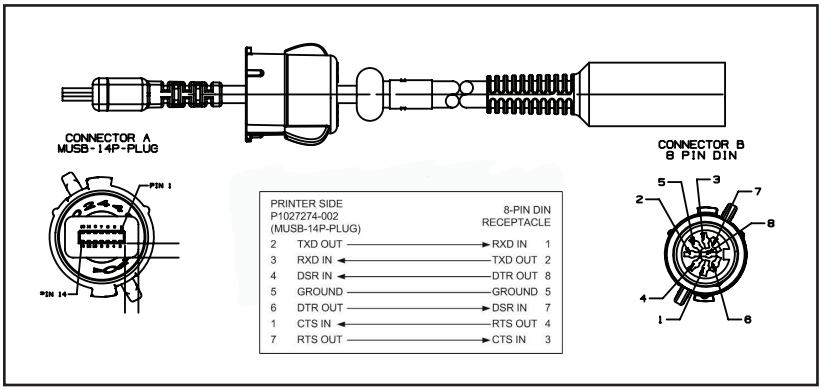

USB Cable

Part Number AT17010-1; USB A to USB Mini B Cable

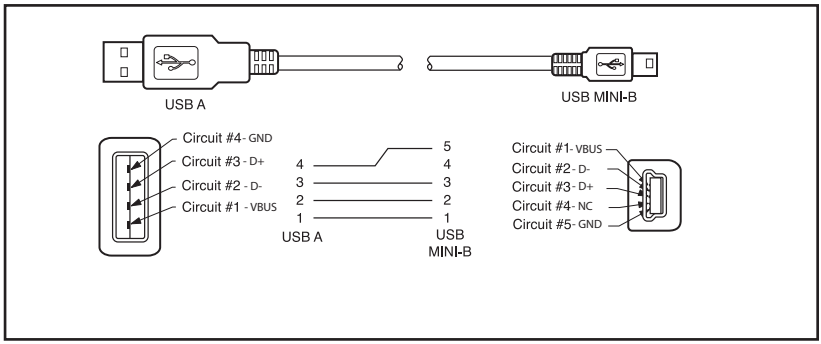

Part Number P1031365-055; 4 Position USB Mini to 4-Pin USB (w/ Strain Relief)

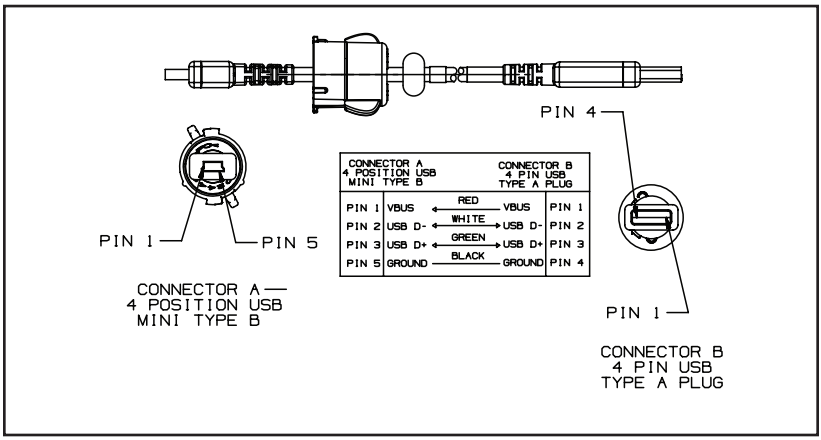

More Interface Cables

Contact the Factory or your Zebra Sales Representative for more information on interface cables to most major manufacturer's data terminals.

You may also vist the Zebra Web site at: www.zebra.com/accessories for a listing of interface cables for all series of Zebra mobile printers

Appendix B

Media Supplies

To insure maximum printer life and consistent print quality and performance for your individual application, it is recommended that only media produced by Zebra be used. Advantages include:

- Consistent quality and reliability of media products.
- Large range of stocked and standard formats.
- In-house custom format design service.
- Large production capacity which services the needs of many large and small media consumers including major retail chains world wide.
- Media products that meet or exceed industry standards.

For more information go the Zebra website (www.zebra.com) and select the Products tab, or refer to the CD included with the printer.

Appendix C

Maintenance Supplies

In addition to using quality media provided by Zebra, it is recommended that the printer be cleaned as prescribed in the maintenance section. The following items are available for this purpose:

- Cleaning Pen (10 pack), Reorder No. AN11209-1

Appendix D

Product Support

When calling with a specific problem regarding your printer, please have the following information on hand:

- Model number/type (e.g. QLn320)
- Unit serial number (refer to figure on opposite page)
- Product Configuration Code (PCC) (refer to figure on following page))

In the Americas contact

Regional Headquarters	Technical Support	Customer Service Dept.
Zebra Technologies Corporation 475 Half Day Road, Suite 500 Lincolnshire, Illinois 60069 U.S.A T: +1 847 634 6700 Toll-free +1 866 230 9494 F: +1 847 913 8766	T: +1 877 275 9327 F: +1 847 913 2578 Hardware: ts1@zebra.com Software: ts3@zebra.com	For printers, parts, media, and ribbon, please call your distributor, or contact us. T: +1 877 275 9327 E: clientcare@zebra.com

In Europe, Africa, the Middle East, and India contact

Regional Headquarters	Technical Support	Internal Sales Dept.
Zebra Technologies Europe Limited Dukes Meadow Millboard Road Bourne End Buckinghamshire SL8 5XF, UK T: +44 (0)1628 556000 F: +44 (0)1628 556001	T: +44 (0) 1628 556039 F: +44 (0) 1628 556003 E: Tseurope@zebra.com	For printers, parts, media, and ribbon, please call your distributor, or contact us. T: +44 (0) 1628 556032 F: +44 (0) 1628 556001 E: cseurope@zebra.com

In the Asia Pacific region contact

Regional Headquarters	Technical Support	Customer Service
Zebra Technologies Asia Pacific Pte. Ltd. 120 Robinson Road #06-01 Parakou Building Singapore 068913 T: +65 6858 0722 F: +65 6885 0838	T: +65 6858 0722 F: +65 6885 0838 E: (China) tschina@zebra.com All other areas: tsasiapacific@zebra.com	For printers, parts, media, and ribbon, please call your distributor, or contact us. T: +65 6858 0722 F: +65 6885 0836 E: (China) order-csr@zebra.com All other areas: csasiapacific@zebra.com

continued

Serial and PCC Number Locations for QLn Series Printers

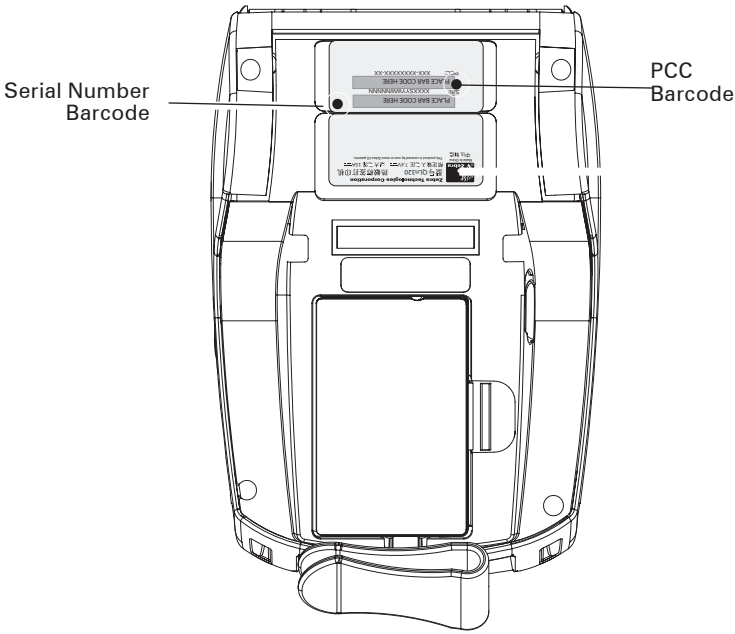

QLn320 (Bottom View)

Appendix E

Battery Disposal

The EPA certified RBRC® Battery Recycling Seal on the Lithium-Ion (Li-Ion) battery supplied with your printer indicates Zebra Technologies Corporation is voluntarily participating in an industry program to collect and recycle these batteries at the end of their useful life, when taken out of service in the United States or Canada. The RBRC program provides a convenient alternative to placing used Li-Ion batteries into the trash or the municipal waste stream, which may be illegal in your area.

Important • When the battery is depleted, insulate the terminals with tape before disposal

Please call 1-800-8-BATTERY for information on Li-Ion battery recycling and disposal bans/restrictions in your area. Zebra Technologies Corporation's involvement in this program is part of our commitment to preserving our environment and conserving our natural resources.

Outside North America, please follow local battery recycling guidelines.

Product Disposal

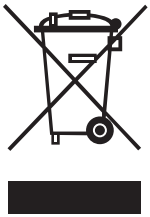

The majority of this printer's components are recyclable.

Do not dispose of any printer components in unsorted municipal waste. Please dispose of the battery according to your local regulations, and recycle the other printer components according to your local standards.

For more information, please see our web site at: http://www.zebra.com/environment

Appendix F

Using zebra.com

The following examples use the search functions on Zebra's Web site for finding specific documents .

Example1: Find the Mobile Printer WIreless Configuration Guide.
Go to www.zebra.com/manuals.
Select as a manual type "Networking Manual" then click on "Submit".

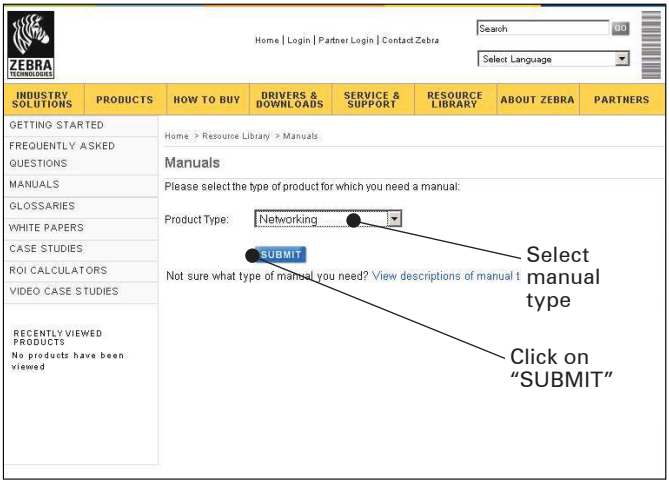

At the resulting screen, select Wireless Mobile as the networking type. Then select the desired language. (Best choices are "All" or "English")

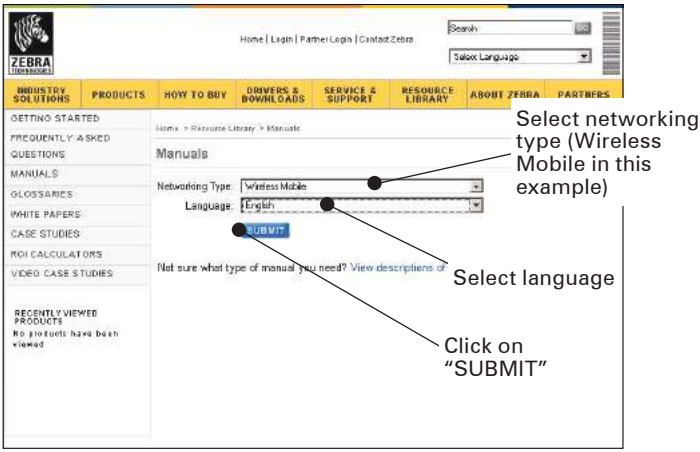

At the resulting screen, select "Zebra Mobile Printers - Wireless Configuration Guide" then click on "Download" to begin the download process.

Example 2: Find the Net Bridge Download page:

Go to www.zebra.com/software and access the screen below.

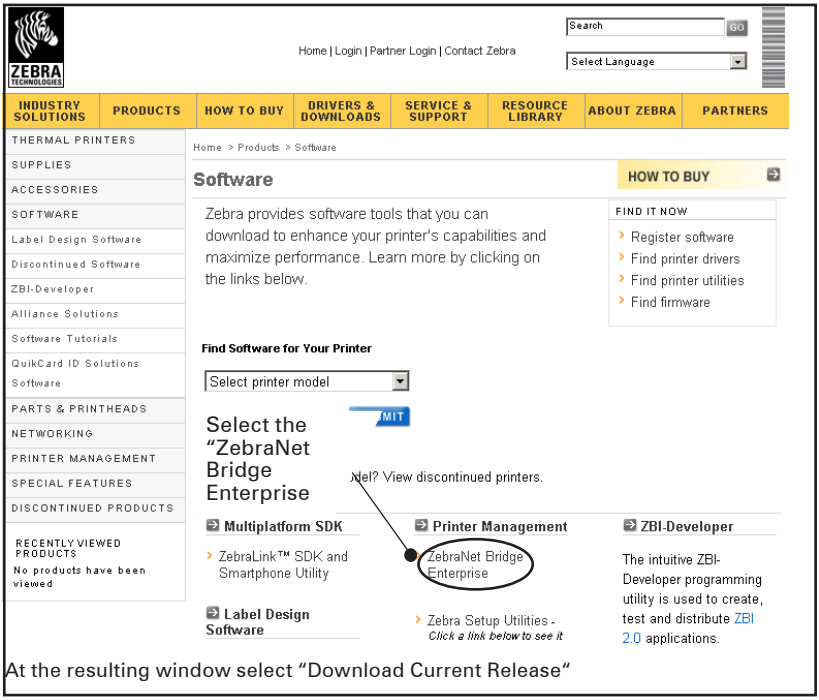

At the resulting window select "Download Current Release"

Appendix G

Alert Messages

The following alert messages will be displayed to inform the user of various fault conditions that may occur with the QLn Series printer.

Line One (Status)	Line Two (Action)	Notes
MEDIA OUT	LOAD MEDIA	
MEDIA COVER OPEN	CLOSE MEDIA COVER	
MAINTENANCE NEEDED	CLEAN PRINTHEAD	
PAPER JAM	REMOVE MEDIA	
BATTERY DIMINISHED	CONSIDER REPLACING	
WARNING - BATTERY	IS PAST USEFUL LIFE	
REPLACE BATTERY	SHUTTING DOWN	
BATTERY FAILED	REPLACE BATTERY	
BATTERY LOW	CHARGE BATTERY	
CHARGING TEMP FAULT	MUST BE 0-40° C	Battery Over Temp
CHARGING TEMP FAULT	MUST BE 0-40° C	Battery Under Temp
CHARGING FAULT	REPLACE BATTERY	
DOWNLOADING	FIRMWARE	
FIRMWARE	WRITING TO FLASH	
LOOKING FOR UPDATES	PLEASE WAIT. . .	When searching for updates
RETRIEVING FIRMWARE	DO NOT POWER OFF!	When retrieving an application
RETRIEVING NEW FILES	PLEASE WAIT. . .	When downloading files
SENDING FEEDBACK	PLEASE WAIT. . .	When sending feedback
LOSS OF SIGNAL	MOVE IN RANGE OF AP	For 802.11 models only
SIGNAL RESTORED	N/A	For 802.11 models only

Note • Highlighted rows indicate Mirror Alert Messages. The mirror function is only available on units with either an 802.11 radio, Ethernet, or both.

Index

A

Accessories
- Belt clip 40
- Carrying Strap 42
- list of 63
- Shoulder Strap 41
- using 40

Alert Messages 72
Alerts 32,72

B

Battery, charging 16
Battery, disposal 69
Battery, installing 12
Battery life, tips for extending 43
Battery pack
- Smart Battery, features 8

Battery, safety 13
Battery Safety Guidelines 17
Bluetooth™ Networking Overview 38
Bluetooth Device Address (BDA) 38

C

Cables, RS232 64
Cables, USB 65
Charger, battery
- UCLI72-4 Quad Charger 16
  - charging times 16
  - front panel indicators 16

Charger Safety Guidelines 13
Cleaning
- general instructions 43
- QLn Series 44

Communications
- cable
  - strain relief for 36
- Ports 59
- RS232
  - with a cable 35
- USB
  - Connector signals 60
  - with a cable 35

Communications diagnostics 50
Configuration label, printing 50

D

Damage, shipping 7
Document Conventions 6

M

Main Menu Screen 32
Manual
- CPCL Programming 39

Media, loading 24
- peel-off mode 26
- QLn Series 24
- tear-off mode 25

Media, supplies 66

O

Operator Controls 27
- Keypad 27
- LCD Control Panel 27

P

Printer
- QLn220 Dimensions 62
- QLn320 Dimensions 61

Printing Method
- Direct Thermal 9

Programming language
- CPCL 7

R

Radio optionsSee Wireless communications
Real Time Clock 55

S

Software 39
Specifications
- Font/bar Code 56
- Label 55
- Memory/communications 55
- Physical 60
- printing 55

T

Troubleshooting
- Communications Diagnostics Mode 50
- Keypad control panel indicators 46
- LCD control panel indicators 47

Troubleshooting tests 50
- printing a configuration label 34,50
  - QLn Series configuration label 52

Troubleshooting Topics 48

W

Wireless communications
- Bluetooth™ radio 38
- WLAN Overview 39

Patent Numbers

This product and/or its use may be covered by one or more of the following US patents and corresponding international patents worldwide

D275,286	5,113,445	5,399,846	5,726,630	6,261,009
D347,021	5,140,144	5,408,081	5,768,991	6,261,013
D389,178	5,132,709	5,410,139	5,790,162	6,267,521
D430,199	5,142,550	5,410,140	5,791,796	6,270,072 B1
D433,702	5,149,950	5,412,198	5,806,993	6,285,845 B1
D549,768	5,157,687	5,415,482	5,813,343	6,292,595
3,964,673	5,168,148	5,418,812	5,816,718	6,296,032
4,019,676	5,168,149	5,420,411	5,820,279	6,364,550
4,044,946	5,180,904	5,436,440	5,848,848	6,379,058 B1
4,360,798	5,229,591	5,444,231	5,860,753	6,409,401 B1
4,369,361	5,230,088	5,449,891	5,872,585	6,411,397 B1
4,387,297	5,235,167	5,449,893	5,874,980	6,428,227 B2
4,460,120	5,243,655	5,468,949	5,909,233	6,480,143
4,496,831	5,247,162	5,479,000	5,976,720	6,530,705
4,593,186	5,250,791	5,479,002	5,978,004	6,540,122
4,607,156	5,250,792	5,479,441	5,995,128	6,540,142
4,673,805	5,262,627	5,486,057	5,997,193	6,607,316
4,736,095	5,267,800	5,503,483	6,004,053	6,609,844
4,758,717	5,280,163	5,504,322	6,010,257	6,655,593
4,816,660	5,280,164	5.519,381	6,020,906	6,784,787
4,845,350	5,280,498	5,528,621	6,034,708	6,874,958
4,896,026	5,304,786	5,532,469	6,036,383	6,899,477
4,897,532	5,304,788	5,543,610	6,057,870	6,908,034
4,923,281	5,321,246	5,545,889	6,068,415	7,126,716
4,933,538	5,335,170	5,552,592	6,068,415	7,137,000
4,992,717	5,364,133	5,570,123	6,095,704	7,172,122
5,015,833	5,367,151	5,578,810	6,109,801	7,190,270
5,017,765	5,372,439	5,589,680	6,123,471	
5,021,641	5,373,148	5,612,531	6,147,767	
5,029,183	5,378,882	5,642,666	6,151,037	
5,047,617	5,396,053	5,657,066	6,201,255 B1	
5,103,461	5,396,055	5,680,459	6,231,253 B1	

Zebra Technologies Corporation
475 Half Day Road, Suite 500
Lincolnshire, IL 60069
Phone: +1 847.634.6700
Toll Free: +1 800.423.0442
Fax: +1 847.913.8766

Solutions for Automatic Identification, Barcodes and Mobility

More than 3000 customers in 15 countries • More than 12,000 products in stock

www.logiscenter.com
902 050 030

www.logiscenter.it
02 479 216 97

www.logiscenter.de
info@logiscenter.de

www.logiscenter.pt
308 800 842

About LOGISCENTER

Grupo Logiscenter is the leading provider in Europe of automatic identification and data capture equipments. Our products include barcode printing and reading devices, mobile computing devices, wireless access points, identification cards, and consumables.

Reasons to work with us

Our customers come first. Our objective is not only selling our products but also holding a long-lasting relationship with our customers, based on the befenits and advantages we create for you and your company.

The best brands. We offer products from the best manufacturers worldwide.

Expert technical support team. Our support staff are experts in the products we sell. But not just the products, they can tell you the best solution for your particular problem or need.

Largest stock. We have a permament stock of more than 12,000 products.

Same-day shipping. For all orders placed and confirmed before 16:00 on working days.

Best prices. With Logiscenter, you can be sure that you are paying a fair price for your products we will not overcharge you.

Easy returns. Damaged or defective products can be returned easily, for an exchange or reimbursement.

Our Brands

MOTOROLA
ZEBRA TECHNOLOGIES
Intermec
Honeywell
DATALOGIC
datamax·o'neil
Metrologic
LXE
EPSON
elo
star
unitech
PRINTRONIX
symbol

Solutions for: Industry • Consumer • Mobility Transportation and Logistics • Retail • Health

Label printers

Barcode readers

Data terminals & PDA

PVC card printers

RFID

Consumables
(labels, ribbons, PVC cards)

All Brands Technical Service

GRUPO LOGISCENTER, S.L. - The Barcode Solutions Center
Av. Puente Cultural 10-A • 28702 San Sebastián de los Reyes - MADRID (Spain)
CIF ES B85538601 • info@logiscenter.com • www.logiscenter.com